VERTICAL production center

V450 (V1814) / V650 (V2516) / V33i (V3420) / V42i (V4220) /
V42iW (V4225) / V1100 (V4325) / V1300 (V5030) / V1500 (V6030)

ISO 9001 CE

YAMARIS MACHINERY PTE LTD

No. 15 Pioneer Sector 3, Singapore 628348
Tel: (65) 6862 9768 / 9627 0967 Fax: (65) 6862 8917
Email: yamaris@singnet.com.sg Website: www.yamaris.com.sg

Leaderway
台灣力得衛宇龍科技股份有限公司
LEADERWAY CNC TECHNOLOGIES CO., LTD.

Leaderway

V series

VERTICAL PRODUCTION CENTER

THE POWERFUL V-SERIES MEETS YOUR REQUIREMENT

The new trend with new challenges: small batch of production involving various cutting processes, more and more changes into series production.

The best choice is V-series machines.

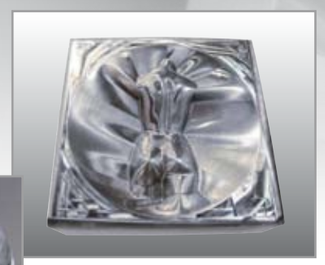

力量 **Power**

速度 **Speed**

精準 **Accuracy**

Leaderway

V series

VERTICAL PRODUCTION CENTER

THE POWERFUL V-SERIES MEETS YOUR REQUIREMENT

4th axis preparation (OPT.)

Easy maintenance double nets

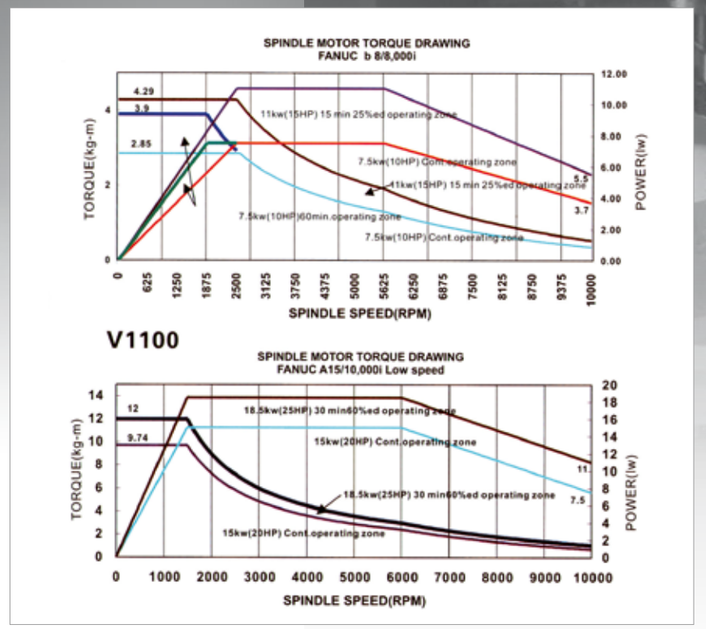

Efficient chip removal system

The powerful V-series is specially for machining the typical small parts and mold found at man job shops, and the standard 10000rpm, 40-taper spindle is ideal for finishing work.

Leaderway

V series

VERTICAL PRODUCTION CENTER

THE POWERFUL V-SERIES MEETS YOUR REQUIREMENT

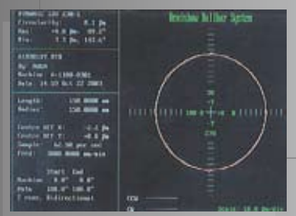

For example, the compact V-650's 650 x 410 x 500 mm (25.5" x 16" x 19.6") travels and 770 x 400 mm (30" x 15.7") table make it ideal for most of the jobs a typical shop encounters

The small footprint saves space and makes the machine's cost very reasonable.

High Chip Removal Rate

FACE MILLING
S45C **Steel**

Material Removal Rate

608 cc/min.

Tool	ø63mm x 6T
Spindle speed	1500 rpm
Feedrate	2250 mm/min.
Width of cut	60mm
Depth of cut	4.5mm

FACE MILLING
S45C **Steel**

Depth of cut

7.5 mm

Tool	ø80mm x 5T
Spindle speed	596 rpm
Feedrate	298 mm/min.
Width of cut	65mm
Material Removal Rate	145cc/min.

END MILLING
Aluminum

Material removal rate

1,960 cc/min.

Tool	ø40mm x 4T
Spindle speed	12000 rpm
Feedrate	20000 mm/min.
Width of cut	28mm
Depth of cut	3.5mm

END MILLING
S45C **Steel**

Material Removal Rate

400 cc/min.

Tool	ø16mm x 4T
Spindle speed	5000 rpm
Feedrate	2000 mm/min.
Width of cut	10mm
Depth of cut	20mm

DRILLING
S45C **Steel**

Cutter diameter

44 mm

Tool	ø44mm x 2T
Spindle speed	1030 rpm
Feedrate	206 mm/min.

TAPPING
S45C **Steel**

Tap

M24

Tool	M24
Spindle speed	60 rpm
Feedrate	180 mm/min.

Leaderway

V series

VERTICAL PRODUCTION CENTER

THE POWERFUL V-SERIES MEETS YOUR REQUIREMENT

刀具 TOOLS

BT40

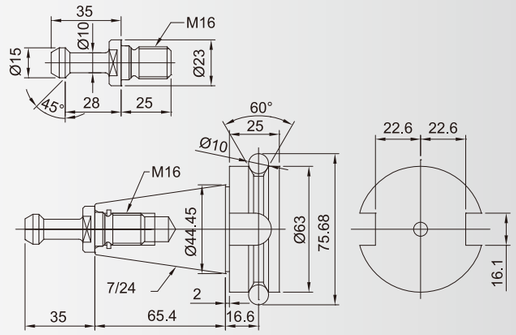

CAT-40

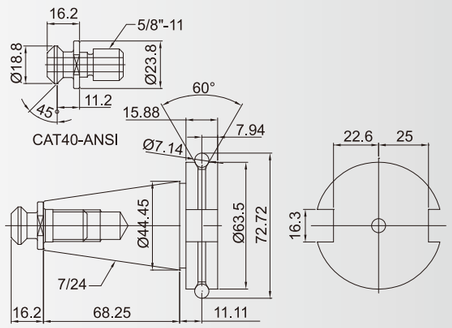

DIN40

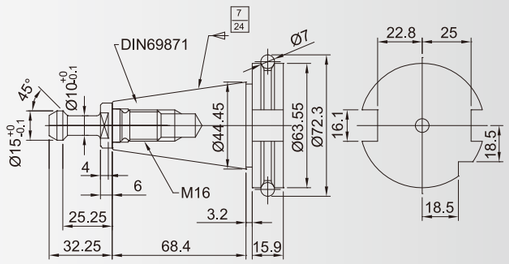

尺寸 DIMENSION

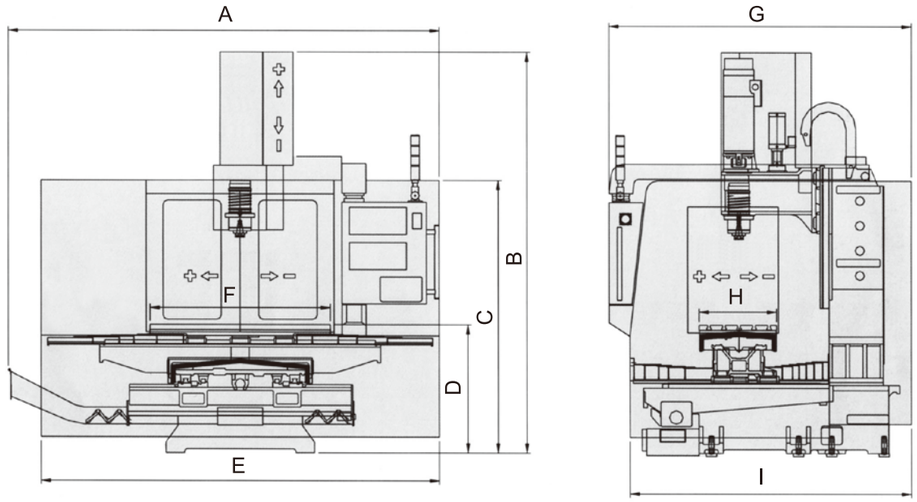

	A	B	C	D	E	F	G	H	I
V450 (V1814)	1830	2436	1975	900	1650	620	2265	350	2286
V650 (V2516)	1900	2592	1975	900	2000	770	2265	400	2286
V33i (V3420)	2755	2680	1820	840	2310	960	2015	515	1875
V42i (V4220)	2870	2680	1820	855	2650	1200	2015	515	1875
V42iW (V4225)	3065	2607	1840	895	2650	1250	2429	600	2129
V1100 (V4325)	3295	2745	2146	1010	2800	1350	2510	600	2150
V1300 (V5030)	4020	3410	2005	965	3600	1600	3340	750	2540
V1500 (V6030)	4020	3410	2005	965	3600	1600	3340	750	2540

工作台 TABLE SIZE

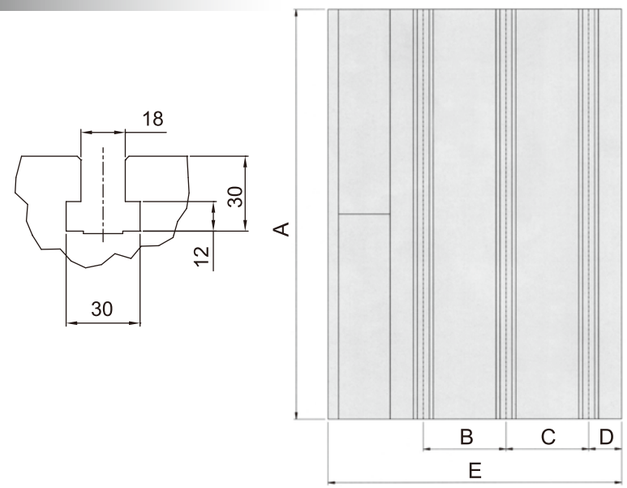

	A	B	C	D	E
V450 (V1814)	620	125	125	50	444
V650 (V2516)	770	125	125	75	485
V33i (V3420)	960	125	125	62.5	515
V42i (V4220)	1200	125	125	50	515
V42iW (V4225)	1250	125	125	50	600
V1100 (V4325)	1350	125	125	50	600
V1300 (V5030)	1600	125	125	125	750
V1500 (V6030)	1600	125	125	125	750

Leaderway

V series

VERTICAL PRODUCTION CENTER

THE POWERFUL V-SERIES MEETS YOUR REQUIREMENT

規格表 MACHINE SPECIFICATIONS

ITEM	項目		V450 (V1814)	V650 (V2516)	V33i (V3420)	V42i (V4220)	V42iW (V4225)	V1100 (V4325)	V1300 (V5030)	V1500 (V6030)
Controller	控制器		Fanuc 0iMD (8.4"color)	Fanuc 0iMD (8.4"color)	Fanuc 0iMD (8.4"color)	Fanuc 0iMD (8.4"color)	Fanuc 0iMD (8.4"color)	Fanuc 0iMD (8.4"color)	Fanuc 0iMD (8.4"color)	Fanuc 0iMD (8.4"color)
X axis travel	X軸行程	mm(in)	450(17.7)	650(25.5)	860(33.8)	1066(41.9)	1066(41.97)	1100(43)	1300(51)	1500(59)
Y axis travel	Y軸行程	mm(in)	350(13.7)	410(16)	510(20)	510(20)	630(24.8)	610(24)	760(30)	760(30)
Z axis travel	Z軸行程	mm(in)	400(15.7)	500(19.6)	500 (19.6)	500 (19.6)	550(21.65)	600 (23.6)	700 (27.5)	700(27.5)
Spindle nose to table	主軸鼻端到台面	mm(in)	125-525 (4.9-20.6)	125-625 (4.9-24.6)	120-620 (4.7-24.4)	85-585 (3.3-23)	125-675(4.92-26.57)	115-715 (4.5-28.1)	135-835 (5.3-32.9)	135-835 (5.3-32.9)
Spindle center to column	主軸中心到立柱面	mm(in)	382(15)	420(16.5)	520(20.4)	520(20.4)	640(25.2)	638(25.1)	780(30.7)	780(30.7)
Table size	台面尺寸	mm(in)	620x350 (24.4x13.7)	770x400 (30x15.7)	960x515 (37.8x20)	1200x515 (47x20)	1250x600(49.2x23.6)	1350x600 (53x23.6)	1600x750(63x29.5)	1600x750 (63x29.5)
Table height	台面高度	mm(in)	900(35.4)	950(37.4)	840(33)	875(34.4)	895(35.24)	1010(39.7)	965(38)	965(38)
T solt size	T型溝規格		3-18Tx125	3-18Tx125	4-18Tx125	5-18Tx100	5-18Tx125mm	5-18Tx125	5-18Tx125	5-18Tx125
Table Max. load	最大載重	kg(lbs)	250(550)	300(660)	350(770)	400(880)	700(1540)	800(1760)	1200(2640)	1200(2640)
Spindle speed	主軸轉速	rpm	10,000	10,000	10,000	10,000	10,000	10,000	10,000	10,000
Spindle taper	主軸錐孔		#40	#40	#40	#40	#40	#40	#40	#40
Spindle motor	主軸馬力	KW(HP)	7.5/11(10/14.6)	7.5/11(10/14.6)	7.5/11(10/14.6)	7.5/11(10/14.6)	7.5/11(10/14.6)	15/18.5(20/25)	15/18.5(20/25)	15/18.5(20/25)
X/Y/Z Rapid traverse	快速位移	M/min	20/20/16	36/36/30	30/30/20	30/30/20	30/30/20	24/24/20	24/24/24	24/24/24
X/Y/Z Feed rate	快速進給	M/min	1-10	1-10	1-10	1-10	1-10	1-10	1-10	1-10
X/Y/Z Servo power	伺服馬力	KW(HP)	1.2(1.6)	1.2(1.6)	1.8(2.4)	1.8(2.4)	1.8(2.4)	4(5.4)	4(5.4)	4(5.4)
ATC	刀具交換系統		Drum type	Drum type	Drum type	Drum type	Drum type	Drum type	Drum type	Drum type
No. of tools	刀具數量		10	16	16	16	16	20	20	20
ATC time (T - T)	換刀時間(T-T)	sec	8	8	8	8	8	8	8	8
ATC time (C - C)	換刀時間(C-C)	sec	12	12	14	14	12	16	16	16
Max. tool weight	最大刀重	kg	7	7	7	7	7	7	7	7
Max. tool Dia.	最大刀徑(相鄰刀)	mm	100	100	100	100	100	100	100	80 / 125
Max. tool Dia (No adjacent)	最大刀徑(無相鄰刀)	mm	125	125	125	125	125	125	125	300
Positioning X/Y/Z	定位精度	mm	VDI/DGQ 3441 0.015	VDI/DGQ 3441 0.015	VDI/DGQ 3441 0.015	VDI/DGQ 3441 0.015	VDI/DGQ 3441 0.015	VDI/DGQ 3441 0.015	VDI/DGQ 3441 0.015	VDI/DGQ 3441 0.015
Repeatability X/Y/Z	重複精度	mm	VDI/DGQ 3441 Ps max. 0.01	VDI/DGQ 3441 Ps max. 0.01	VDI/DGQ 3441 Ps max. 0.01	VDI/DGQ 3441 Ps max. 0.01	VDI/DGQ 3441 Ps max. 0.01	VDI/DGQ 3441 Ps max. 0.01	VDI/DGQ 3441 Ps max. 0.01	VDI/DGQ 3441 Ps max. 0.01
Length	前後長	mm(in)	3194 (125)	3194 (125)	2875 (113)	2875 (113)	2429 (95.6)	3325 (131)	4020 (158)	4020 (158)
Width	左右寬	mm(in)	2311 (90.9)	2311 (90.9)	2860 (112.5)	3200 (125.9)	3065 (120.7)	3295 (129)	3340 (132)	3340 (132)
Machine hight	高度尺寸	mm(in)	2440 (96)	2560 (100)	2500 (98)	2500 (98)	2617 (103)	2905 (114)	3410 (134)	3410 (134)
Weight	機械重量	kg(lbs)	≒3800 (8360)	≒4000 (8800)	≒4200 (9240)	≒4600 (10120)	≒5500 (12100)	≒7000 (15400)	≒10000 (22000)	≒10000 (22000)
Pneumatic source requirement	需求壓力	bar	6	6	6	6	6	6	6	6
Power capacity	電力容量	KVA	15	15	20	20	15	25	25	25

因應技術提昇，所有規格變更恕不另行通知。
All specifications are subject to change without prior notice.

標準附件 STANDARD ACCESSORIES

- Full enclosure guard
- Tool box
- Spindle air purge
- Spindle air blow
- 2 coolant nozzle
- Separated MPG
- PCMCIA Card slot
- RS 232 port
- Look ahead function
- M30 Auto power off
- 3 color indicating light
- Working light
- Rigid tapping
- Helical interpolation
- Coil type chip conveyor
- Automatic lubrication system
- Coolant tank and pump

選配附件 OPTIONAL ACCESSORIES

- 20 bar Filter system for CTS (Coolant thru spindle)
- 4th axis preparation
- 4th axis package with driver and motor
- TS27R tool setter
- Extra 8M function
- Transformer
- Oil mist
- Chain type chip conveyor
- Mitsubishi Controller
- CE specification
- Sea waterproof packing