Air Line Equipment

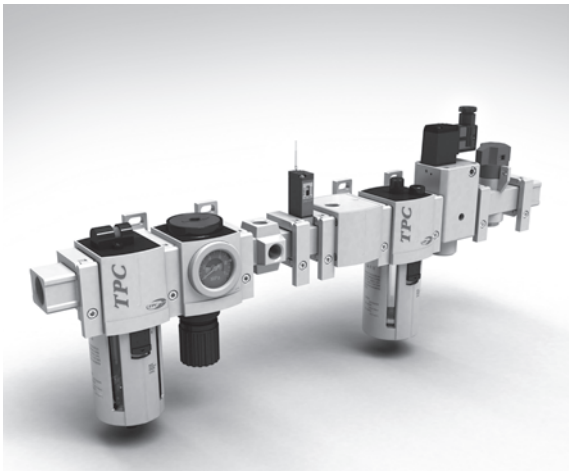

● F. R. L (Combination)
Series PC2, PF2, PR2, PL2, PP2 852
Series PC3, PF3, PR3, PL3, PP3 864
Series PC4, PF4, PR4, PL4, PP4 876
Series PC5, PF5, PR5, PL5, PP5 888
Series PC2~PC5 The Mounting Position of Bracket 900
Coalescing Filter PFH(U)2~PFH(U)5 901
Poggyback Coalescing Filter PPH(U)3~PPH(U)4 906
● Modular Lock Valve
Series PLV 910
● Modular Shutoff Valve
Series PSH 912
● Modular Check Valve
Series PCV 916
● Modular Manifold Block
Series MB 918
● Modular Pipe Adapter
Series PA 920
● Slow Start Valve
Series SSV 922
● Pressure Switch
Series SMS1000 924
● Accessoreis 926
● Precision Pressure Regulator
Series PER 2000, 3000 941
● Vacuum Regulator
Series PVR3000 945
● Clean Regulator
Series PNR4000 946

※ Specifications in this catalogue may be changed for product performance upgrade without notice.
Please inquire separately when purchasing the product.

▣ Modular Type Air Combination

The integral pressure gauge allows the user to set the gauge fan to a specific pressure range for their application needs.

There is an optional filter life indicator which allows the user to see when a element needs replacing.

"T–Bracket" wall brackets are standard on all combination units.

When using the modular lockout valve, the user is able to shut off the stream of air spply for pressure isolation and maintenance. All units are threaded for direct mounting or they can be configured in the modular arrangement.

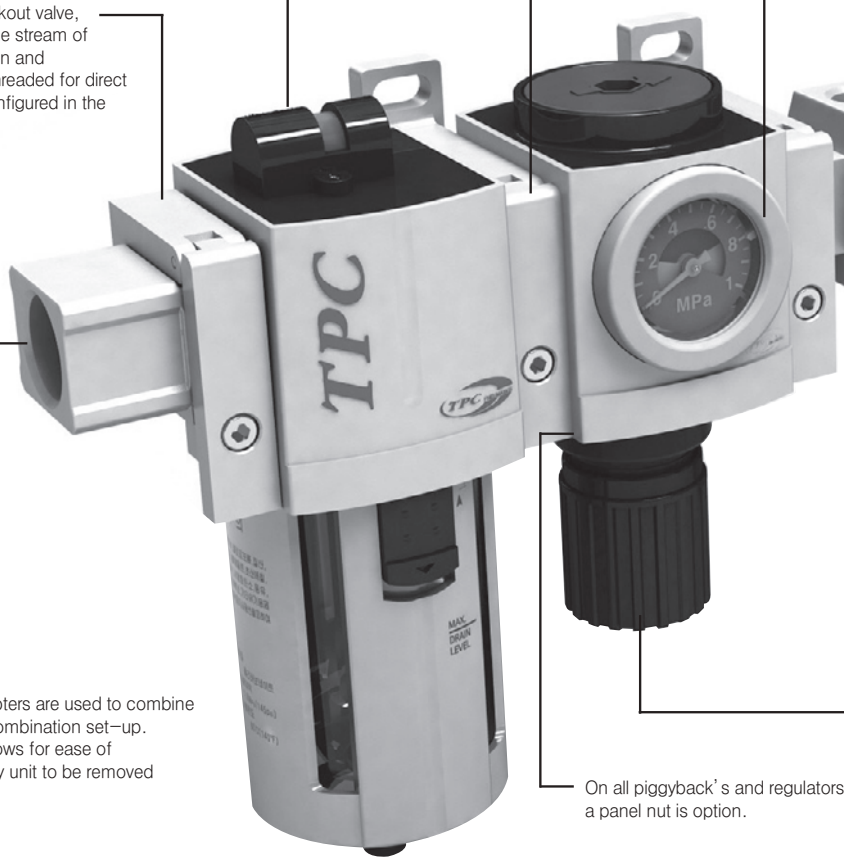

The use of modular pipe adapters are used to combine different thread sizes in the combination set–up. The use of these adapters allows for ease of service and use, by letting any unit to be removed from the combination unit.

On all piggyback's and regulators, a panel nut is option.

PC2 Series

1/8" AND 1/4"

PC3 Series

1/4" AND 3/8"

PC4 Series

3/8" AND 1/2"

The pressure switch is normally attached to amanifold port block, which allows the user to set up low or high pressure levels.

The sight dome can be adjusted, by either turning it clock–wise or counter–clock–wise. This adjusting allows for the oil drip rate to be controlled.

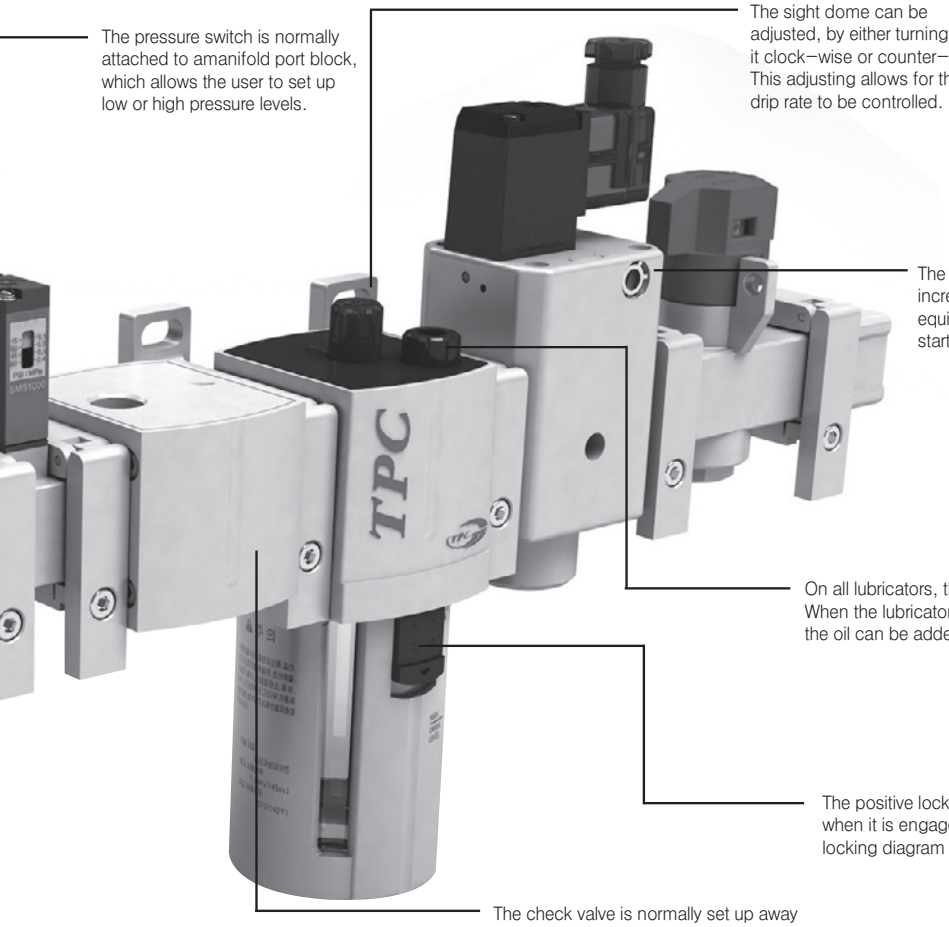

The slow–start valve let's pressure increase gradually, which protects overall equipment and dreates a safer start–up environment.

On all lubricators, there is an auto fill option. When the lubricators are under pressure, the oil can be added.

The positive locking thumb switch "clicks" when it is engaged. It aligns visually to the locking diagram on the unit.

The check valve is normally set up away from the regulator.
The check valve is used to maintain downstream pressure from moving upstream, in case there is an upstream pressure loss

A manifold port block allows clean, regulated air, to be diverted for use in other applications.

There is an optional tamper resistant kit that is easily installed and does not allow adjustments of the regulated pressure.

PC5 Series

3/4" AND 1"

PFH Series

1/8", 1/4", 3/8"
1/2", 3/4" AND 1"

PPH Series

1/4", 3/8" AND 1/2"

Series PC2

Combination 1/8″and 1/4″

Symbol

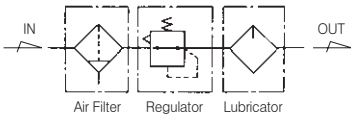

▣ Standard Specifications

Fluid		Air
Max. Operating Pressure (MPa)		1.0(140psi)
Proof Pressure (MPa)		1.5(200psi)
Set Pressure Range(MPa)	Standard	0.05 ~ 1.0(7~140psi)
	Madd to Order Specifications	0.05~0.2(7~30psi), 0.05~0.47(7~60psi)
Ambient and Fluid Temperature (℃)		−5~60(23~140°F) (Non−freezing)
Flow Capacity ※ (N ℓ /min)	1/8 ″	1,000(35scfm)
	1/4 ″	1,300(46scfm)
Filtration (㎛)		5
Construction		Relieving Sytle
Recommended Oil		ISO VG32 (Turbine Oil 1 Class)
Port Size for Pressure Gauge (Rc (PT), NPT)		1/8 ″
Weight (kg)		0.49(1.08lb)

※ Test conditions : Supply pressure 0.7MPa(100psi), Set pressure 0.6MPa(90psi)

▣ How to Order

PC 2 A — ＊ 02 D G — ＊ — C1M1Z5

Series
(Combination Unit)

Components

Blank	Filter−Regulator−Lubricator
A	Piggyback−Lubricator
B	Filter−Regulator
C	Filter−Coalescing Filter(0.3)−Regulator
D	Piggyback−Coalescing Filter(0.3)
E	Filter−Coalescing Filter(0.01)−Regulator
F	Piggyback−Coalescing Filter(0.01)

Thread

Blank	Rc(PT)
N	NPT
G	G(PF)

Port Size

01	1/8
02	1/4

Drain Option

	Blank	Manual Push Drain
Note1)	D	Auto Drain (N.O Type)
	D2	Auto Drain
	D5	Manual Drain

Note1) Min. operating pressure is 0.15MPa(20psi) for Auto Drain (N.O Type)

Pressure Gauge

Symbol	Descripition	Pressure Range
Blank	None	
G	Integral Pressure Guage (W/Limit Indicator)	1.0MPa(140psi)
P	Pressure Range	1.0MPa(140psi)
P2	Pressure Range	0.2MPa(30psi)
P4	Pressure Range	0.4MPa(60psi)

Accessories

Symbol	Port Size	Description	Applicable Series
C1	1/8″	Check Valve	PC2~PC3
C2	1/4″		PC2~PC4
C3	3/8″		PC4
H	−	Shut−off Valve	PC2~PC5
M1	1/8″	Modular Manifold Block Kit	PC2~PC3
M2	1/4″		PC2~PC4
M3	3/8″		PC4
V	−	Lock−out Valve	PC2~PC5
W	−	Modular Pipe Adapter Kit	PC2~PC5
Z1	−	Pressure Switch, AC110V	PC2~PC5
Z5	−	Pressure Switch, DC24V	PC2~PC5

＊Refer to page 900 for how to attach bracket & how to combine the accessores
＊When specifying more than one symbol, indicate them alphabetically Ex) CIMIZ

Other Option

Blank	Set at 0 to 1.0 MPa, 5㎛(140psi) (Standard)			
2	Set at 0 to 0.2 MPa(30psi)	K	Built−in Check Valve	Note2)
4	Set at 0 to 0.4 MPa(60psi)	R	Flow direction : Right→Left	
E	Non−relieving type	T	Tamper Resistant Kit	Note2,3)
J2	Filter element − 20㎛	U	Regulator (Top mounted)	
J4	Filter element − 40㎛	XC16	Copper−free	

Note2) Refer to page 935 for Built−in check valve, Tamper resistant kit.
Note3) Separately packed, Not assembled.
＊If ordering more than one option, indicate symbols numerically then aiphabetically Ex) 2EK
＊Over Max. pressure valve can be set.

▣ Construction

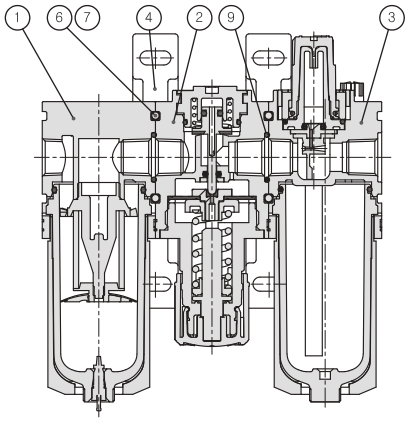

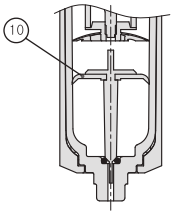

Auto-Drain Standard Type

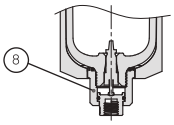

Auto-Drain Piping Type

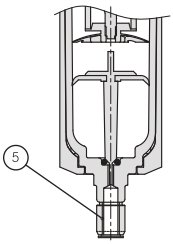

Auto-Drain Piping Type

Main Parts/Parts List

No.	Description	Material	Remark
①	Filter Ass'y	–	
②	Regulator Ass'y	–	
③	Lubricator Ass'y	–	
④	Bracket Ass'y	–	
⑤	Fitting	–	
⑥	Connecting Screw	Carbon Steel	
⑦	Connecting Nut	Carbon Steel	
⑧	Manual-Drain Piping Ass'y	–	

Replacement Parts/Parts List

No.	Description	Material	Part No.
⑨	Combination O-ring	NBR	AN015-01
⑩	Auto Bowl Ass'y (Auto-Drain Ass'y Included)	–	PF2-26A002-01

▣ PC2 Dimensions

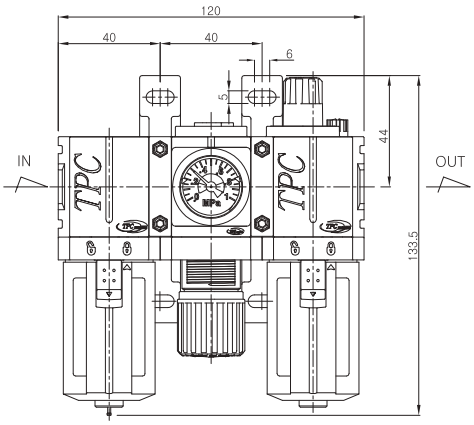

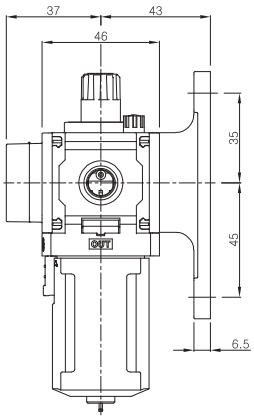

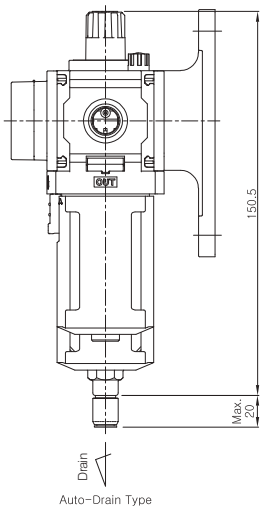

Auto-Drain Type

▣ PC2A Dimensions

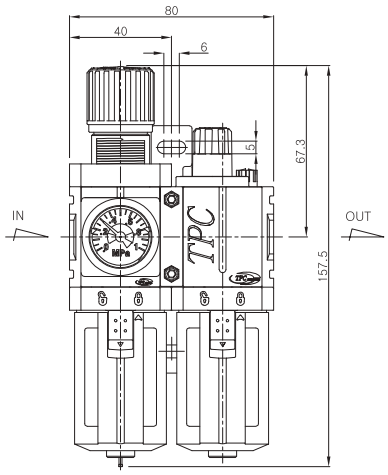

Filter Regulator Lubricator

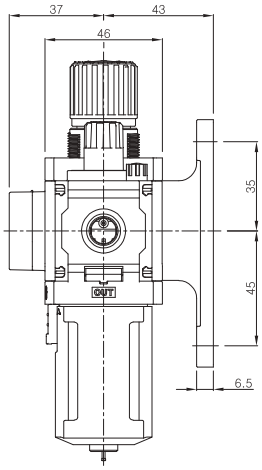

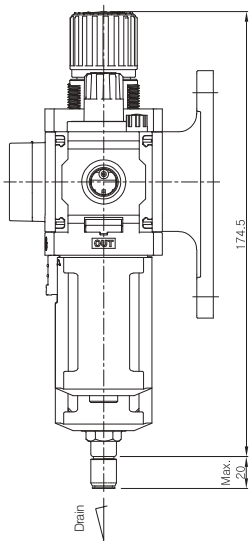

Auto-Drain Type

▣ PC2B Dimensions

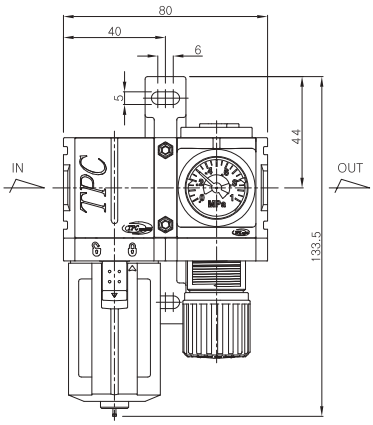

Filter Regulator

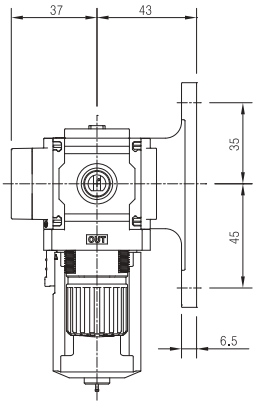

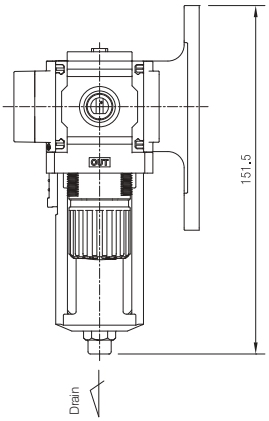

Auto-Drain Type

▣ PC2 Series Flow Characteristics

▶ 1/8″ PC2

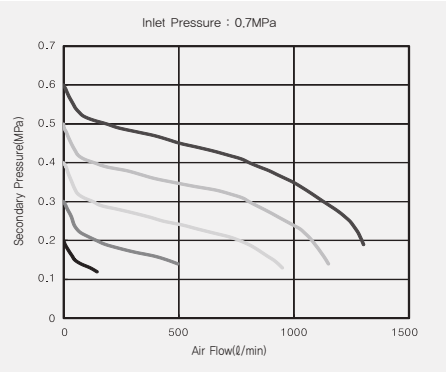

▶ 1/4″ PC2

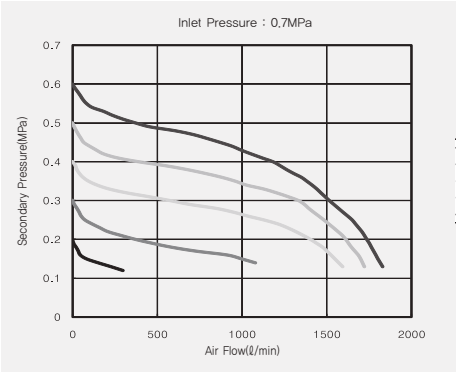

▶ 1/8″ PC2A

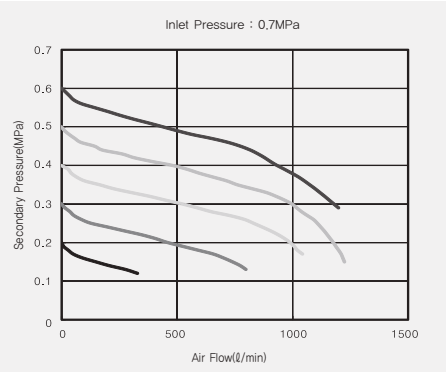

▶ 1/4″ PC2A

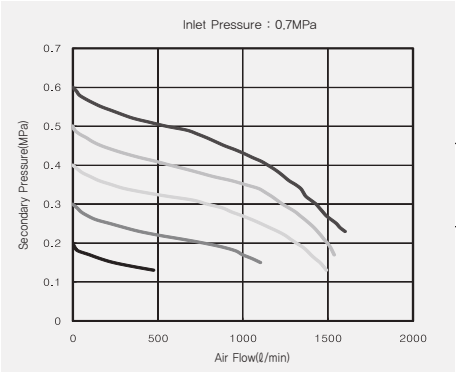

▣ PC2 Series Pressure Characteristics

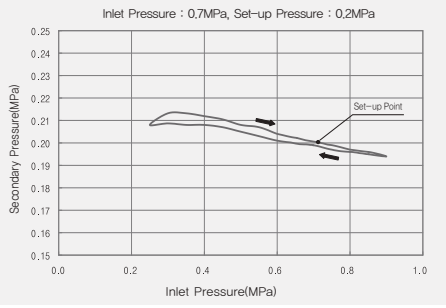

Series PF2

Filter 1/8″ and 1/4″

▣ Standard Specifications

Fluid		Air
Max. Operating Pressure (MPa)		1.0(140psi)
Proof Pressure (MPa)		1.5(200psi)
Ambient and Fluid Temperature (℃)		−5~60(Non−freezing)
Flow Capacity ※	1/8″	1,100(39scfm)
(N ℓ /min)	1/4″	1,400(50scfm)
Bowl Material		Polycarbonate
Bowl Guard Material		Nymon
Filtration (㎛)		5
Drain Capacity (㎤)		Manual Drain : 15(0.51oz), Auto Drain : 21(0.71oz)
Weight (kg)		0.14(0.31lb)

※ Test conditions : Supply pressure 0.6MPa(90psi), Pressure drop 0.07MPa(10psi)

Symbol

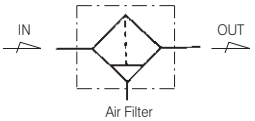

▣ How to Order

PF 2 — ＊ 02 B D — ＊

Series
(Filter Unit)

Thread

Blank	Rc(PT)
N	NPT
G	G(PF)

Port Size

01	1/8
02	1/4

Other Option

Blank	Filter element − 5㎛ (Standard)		
J2	Filter element − 20㎛	R	Flow direction : Right→Left
J4	Filter element − 40㎛	XC16	Copper−free

Drain Option

Blank	Manual Push Drain
D	Auto Drain (N.O Type)
D2	Auto Drain (Piping Exhaust)
D5	Manual Drain (Piping Exhaust)

Note1)

Note1) Min.operating pressure is 0.15MPa(20psi) for Auto Drain (N.O Type)

Bracket Option

Blank	None
B	Bracket

Note2)

Note2) Separately packed, Not assembled.

▣ Construction

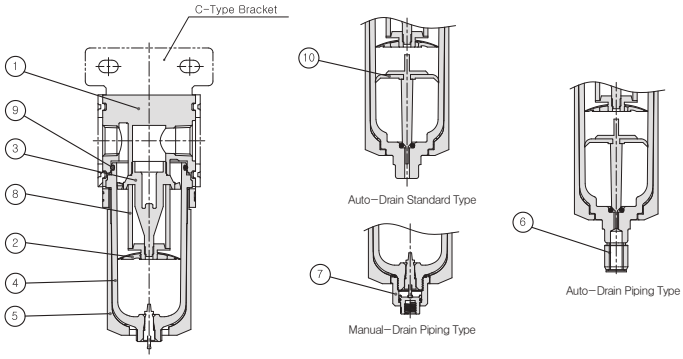

Main Parts/Parts List

No.	Description	Material	Remark
①	Body	Aluminum	
②	Baffle	Acetal	
③	Deflector	Nylon	
④	Bowl	Polycatbonate	
⑤	Bowl Guard	Nylon	
⑥	Fitting	–	
⑦	Manual Drain Piping Ass'y	–	

Replacement Parts/Parts List

No.	Description	Material	Part No.
⑧	Filter element	Polyethelene	PF2-24-005-01
⑨	Bowl o-ring	NBR	DX2R-53-3000
⑩	Auto Bowl ass'y (Auto-Drain Ass'y Included)	–	PF2-26A002-01

▣ Dimensions

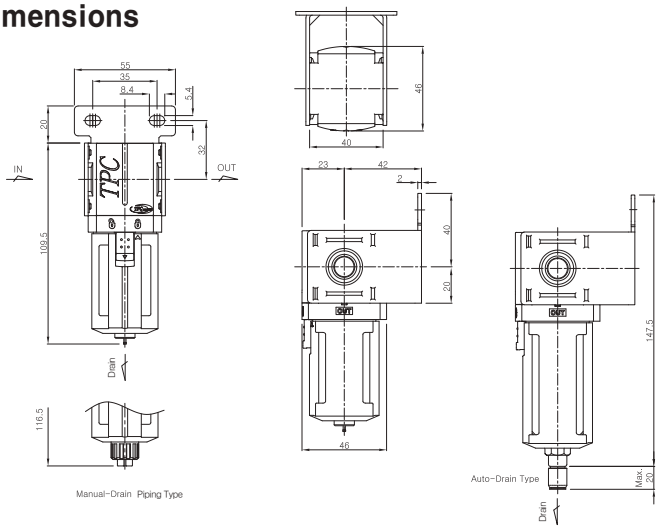

▣ Flow Characteristics

▶ 1/8″ PF2

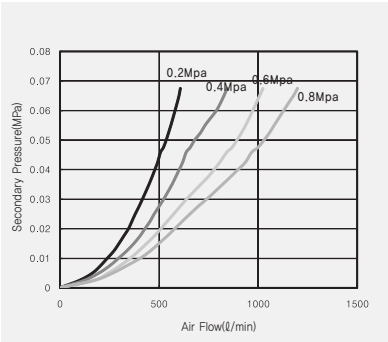

▶ 1/4″ PF2

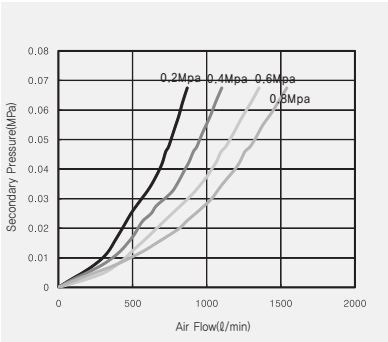

Series PR2

Regulator 1/8″and 1/4″

▣ Standard Specifications

Fluid		Air
Max. Operating Pressure (MPa)		1.0(140psi)
Proof Pressure (MPa)		1.5(200psi)
Set Pressure Range(MPa)	Standard	0.05~1.0(7~140psi)
	Madd to Order Specifications	0.05~0.2(7~30psi), 0.05~0.4(7~60psi)
Ambient and Fluid Temperature (℃)		−5~60(23~140°F)(Non−freezing)
Flow Capacity ※ (N ℓ /min)	1/8″	1,300(46scfm)
	1/4″	1,700(60scfm)
Construction		Relieving Style
Port Size for Pressure Gauge (Rc (PT), NPT)		1/8″
Weight (kg)		0.18(0.4lb)

※ Test conditions : Supply pressure 0.7MPa(100psi), Set pressure 0.6MPa(90psi)

Symbol

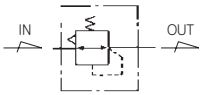

Regulator

▣ How to Order

PR 2 — ＊ 02 B G — ＊

Series
(Regulator Unit)

Thread

Blank	Rc(PT)
N	NPT
G	G(PF)

Port Size

01	1/8
02	1/4

Other Option

Blank	Set at 0 to 1.0 MPa, Standard	K	Built-in Check Valve	Note1)
2	Set at 0 to 0.2 MPa	R	Flow Direction : Right → Left	
4	Set at 0 to 0.4 MPa	T	Tamper Resistant Kit	Note1,2)
E	Non-Relieving type	XC16	Copper-free	

Note1) Refer to page 935 for Built-in Check Valve, Tamper Resistant Kit.
＊If ordering more than one option, indicate symbols numerically then alphabetically Ex)2EK
＊Over Max. pressure value can be set.

Pressure Gauge

Symbol	Description	Pressure Range
Blank	No-Gauge	
G	Integral Pressure Gauge	1.0MPa(140psi)
P	Pressure Gauge	1.0MPa(140psi)
P2	Pressure Gauge	0.2MPa(30psi)
P4	Pressure Gauge	0.4MPa(60psi)

Bracket Option

Blank	None	
B	Bracket + Panel Nut	Note2)
B1	Panel Nut	

Note2) Separately packed, Not assembled

▣ Construction

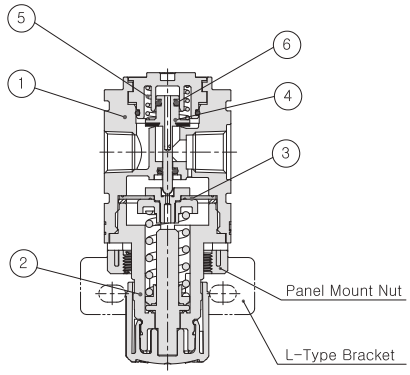

Main Parts/Parts List

No.	Description	Material	Remark
①	Body	Aluminum	
②	Bonnet	Nylon	

Replacement Parts/parts List

No.	Description	Material	Part No.
③	Diaphragm Ass'y	Nylon+NBR	PR2-11A001-01
④	Valve Ass'y	Brass+NBR	PR2-08-001-01
⑤	Valve Spring	Stainless Steel	PR2-14-001-01
⑥	Valve O-ring	NBR	P4-01

▣ Dimensions

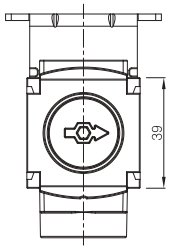

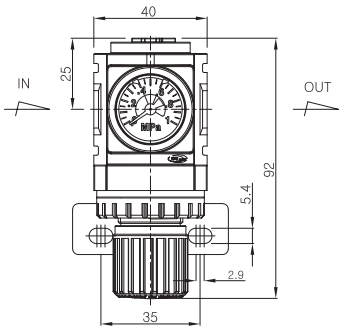

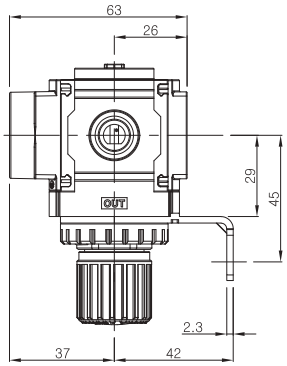

Panel Mounting Hole
(Panel Thickness : Max 3.5mm)

▣ Flow Characteristics

▶ 1/8″ PR2

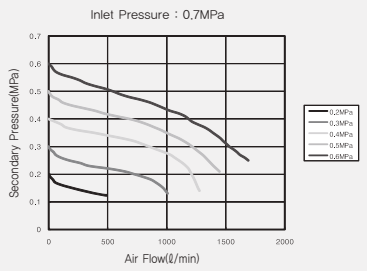

▶ 1/4″ PR2

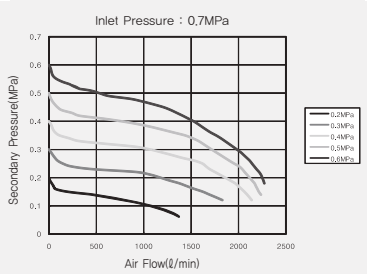

▣ Pressure Characteristics

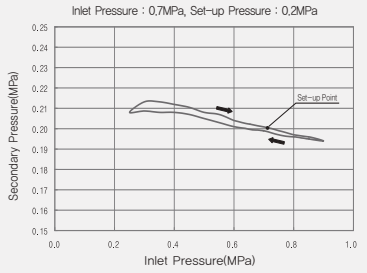

Series PL2

Lubricator 1/8″ and 1/4″

▣ Standard Specifications

Fluid		Air
Max. Operating Pressure (MPa)		1.0(140psi)
Proof Pressure (MPa)		1.5(200psi)
Min Operating Flow (N ℓ /min)		15(0.5scfm)(1/4″)
Bowl Capacity (㎤)		18(0.61oz)
Ambient and Fluid Temperature (℃)		−5~60(23~140°F)(Non−freezing)
Flow Capacity ※	1/8″	1,000(32scfm)
(N ℓ /min)	1/4″	1,700(57scfm)
Bowl Material		Polycarbonate
Bowl Guard Material		Nylon
Recommended Oil		ISO VG32(Turbine Oil 1 Class)
Weight (kg)		0.14(0.31lb)

※ Test conditions : Supply pressure 0.6MPa(90psi), Pressure drop 0.05MPa(7psi)

Symbol

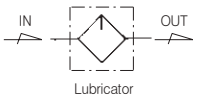

▣ How to Order

PL 2 — ✻ 02 B — ✻

Series
(Lubricator Unit)

Thread

Blank	Rc(PT)
N	NPT
G	G(PF)

Port Size

01	1/8
02	1/4

Other Option

R	Flow Direction : Right→Left
XC16	Copper−Free

Bracket Option

Blank	None	
B	Bracket	Note1)

Note1) Separately packed, Not assembled.

▣ Construction

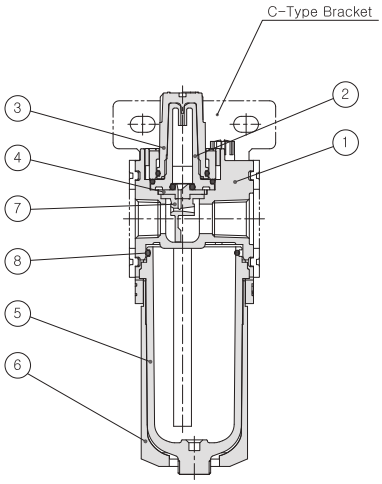

Main Parts/Part List

No.	Description	Material	Remark
①	Body	Aluminum	
②	Inner Sight Dome	Nylon(Clear)	
③	Outer Sight Dome	Nylon(Clear)	
④	Damper Plate	Acetal	
⑤	Bowl	Polycarbonate	
⑥	Bowl Guard	Nylon	

Replacement Parts/Parts List

No.	Description	Material	Part No.
⑦	Damper	NBR	PL2-34-001-01
⑧	Bowl O-ring	NBR	DX2R-53-3000

▣ Dimensions

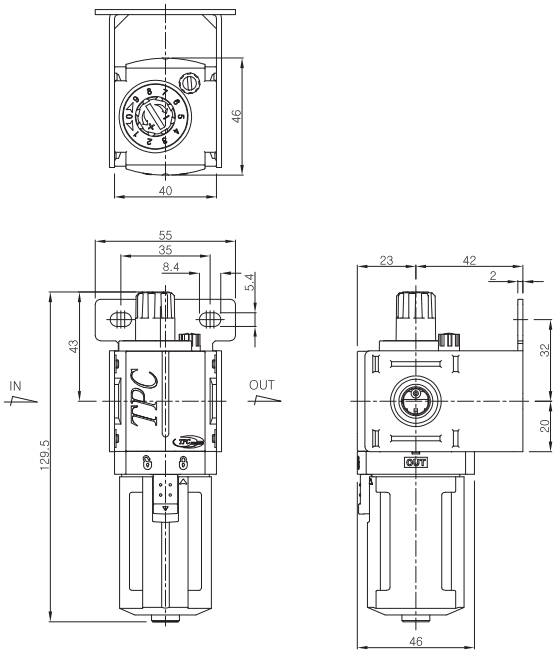

▣ Flow Characteristics

▶ 1/8″ PL2

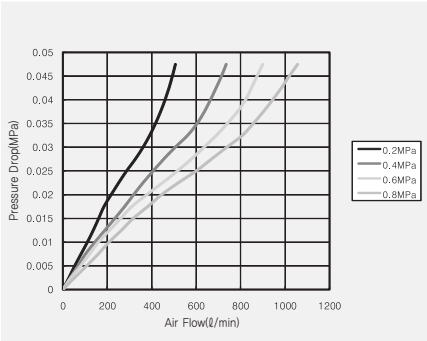

▶ 1/4″ PL2

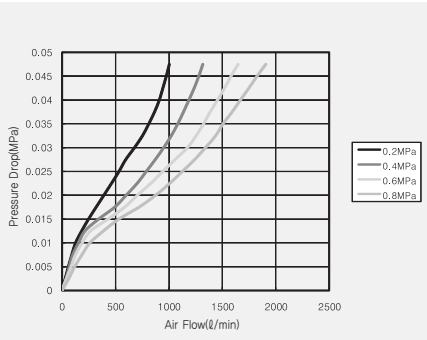

Series PP2

Piggyback 1/8″and 1/4″

Symbol

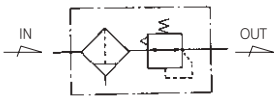

Filter Regulator

▣ Standard Specifications

Fluid		Air
Max. Operating Pressure (MPa)		1.0(140psi)
Proof Pressure (MPa)		1.5(200psi)
Set Pressure (MPa)	Standard	0.05~1.0(7~140psi)
	Made to Order Specifications	0.05~0.2(7~30psi), 0.05~0.4(7~60psi)
Ambient and Fluid Temperature (℃)		−5~60(23~140°F)(NOn−freezing)
Flow Capacity ※ (N ℓ /min)	1/8″	1,200(42scfm)
	1/4″	1,300(46scfm)
Filtration (㎛)		Standard : 5
Construction		Relieving Style
Bowl Material		Polycarbonate
Bowl Guard Material		Nylon
Drain Capacity (㎤)		Manual Drain : 15, Auto Drain : 20
Weight (kg)		0.23(0.5lb)

※ Test conditions : Supply pressure 0.7MPa(100psi), pre−set 0.6MPa(90psi)

▣ How to Order

PP 2 — ✻ 02 B D G — ✻

Series
(Piggyback Unit)

Thread

Blank	Rc(PT)
N	NPT
G	G(PF)

Port Size

01	1/8
02	1/4

Bracket Option

Blank	None	
B	Bracket + Panel Nut	Note2)
B1	Panel Nut	

Note2) Separately packed, Not assembled.

Other Option

Blank	Set at 0 to 1.0 MPa, 5㎛ (Standard)			
2	Set at 0 to 0.2 MPa	K	Built−in Check Valve	Note1)
4	Set at 0 to 0.4 MPa	R	Flow Direction : Right→Left	
E	Non−Relieving Type	T	Tamper Resistant Kit	Note1,2)
J2	Filter element − 20㎛	XC16	Copper−free	
J4	Filter element − 40㎛			

Note1) Refer to page 935 for Built−in Check Valve, Tamper Resistant Kit.
* If ordering more than one option, indicate symbols umerically then alphabetically Ex) 2EK
* Over Max. pressure value can be set.

Pressure Gauge

Symbol	Description	Pressure Range
Blank	NO−Gauge	
G	Integral Pressure Gauge (W/Limit Indicator)	1.0MPa(140psi)
P	Pressure Gauge	1.0MPa(140psi)
P2	Pressure Gauge	0.2MPa(30psi)
P4	Pressure Gauge	0.4MPa(60psi)

Drain Option

Blank	Manual Push Drain	
D	Auto Drain (N.O Type)	Note3)
D2	Auto Drain	
D5	Manual Drain	

Note3) Min. operating pressure is 0.15MPa(20psi) for Auto Drain(N.O Type)

▣ Construction

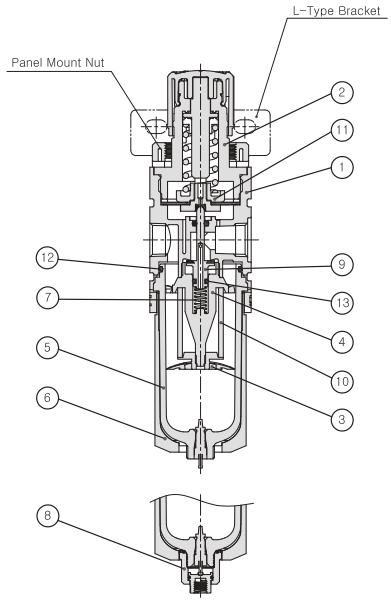

Manual-Drain Piping Type

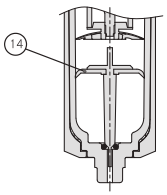

Auto-Drain Standard Type

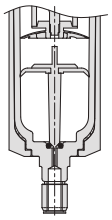

Auto-Drain Piping Type

Main Parts/Parts List

No.	Description	Material	Remark
①	Body	Aluminum	
②	Bonnet	Nylon	
③	Baffle	Acetal	
④	Deflector	Nylon	
⑤	Bowl	Polycarbonate	
⑥	Bowl Guard	Nylon	
⑦	Valve Spring	Stainless Steel	
⑧	Manual-Drain Pipe Ass'y	–	

Replacement Parts/Parts List

No.	Description	Material	Part No.
⑨	Valve Ass'y	Brass+NBR	PP2-08-001-01
⑩	Filter Element	Polyethylene	PF2-24-005-01
⑪	DiaphrAgm Ass'y	Nylon+NBR	PR2-11A001-01
⑫	Bowl O-ring	NBR	DX2R-53-3000
⑬	Valve O-ring	NBR	S4-01
⑭	Auto Bowl Ass'y (Auto-Drain Ass'y Included)	–	PF2-26A002-01

▣ Flow Characteristics

▶ **1/8″ PP2**

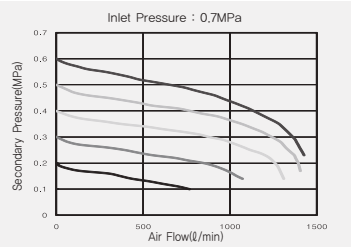

▶ **1/4″ PP2**

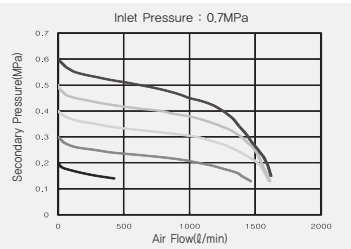

▣ Pressure Characteristics

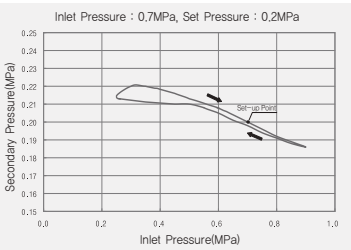

▣ Dimensions

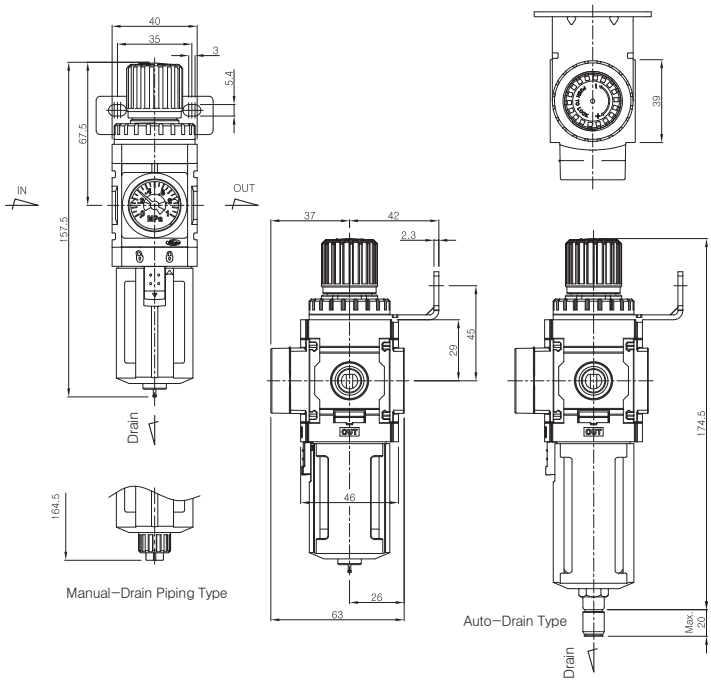

Series PC3

Combination 1/4″and 3/8″

Symbol

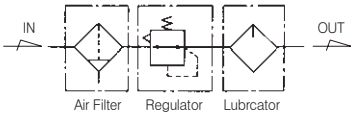

▣ Standard Specifications

Fluid		Air
Max. Operating Pressure (MPa)		1.0(140psi)
Proof Pressure (MPa)		1.5(200psi)
Set Pressure (MPa)	Standard	0.05~1.0(7~140psi)
	Made to Order Specifications	0.05~0.2(7~30psi), 0.05~0.4(7~60psi), 0.05~1.2(7~170psi)
Ambient and Fluid Temperature (℃)		−5~60(23~140°F)(NOn−freezing)
Flow Capacity ※ (N ℓ /min)	1/4″	1,700(60scfm)
	3/8″	2,400(85scfm)
Filtration (㎛)		5
Construction		Relieving Style
Recommended Oil		ISO VG32(Turbine Oil 1 Class)
Port Size for Pressure Gauge (Rc (PT), NPT)		1/8″
Weight (kg)		0.99(1.08lb)

※ Test conditions : Supply pressure 0.7MPa(100psi), pre−set pressure 0.6MPa(90psi)

▣ How to Order

PC 3 A — ✻ 03 D G — ✻ — C1M1Z5

Series
(Combination Unit)

Components

Blank	Filter−Regulator−Lubricator
A	Piggyback−Lubricator
B	Filter−Regulator
C	Filter−Coalescing Filter(0.3)−Regulator
D	Piggyback−Coalescing Filter(0.3)
E	Filter−Coalescing Filter(0.01)−Regulator
F	Piggyback−Coalescing Filter(0.01)

Thread

Blank	Rc(PT)
N	NPT
G	G(PF)

Port Size

02	1/4
03	3/8

Drain Option

	Blank	Manual Push Drain
Note1)	D	Auto Drain (N.O Type)

Note1) Min. operating pressure is 0.15MPa (20psi) for Auto Drain (N.O Type)

Pressure Gauge

Symbol	Description	Pressure Range
Blank	None	
G	Integral Pressure Gauge (W/Limit Indicator)	1.0MPa(140psi)
P	Pressure Gauge	1.0MPa(140psi)
P2	Pressure Gauge	0.2MPa(30psi)
P4	Pressure Gauge	0.4MPa(60psi)

Accessories

Symbol	Port Size	Description	Applicable Series
C1	1/8″	Check Valve	PC2~PC3
C2	1/4″		PC2~PC4
C3	3/8″		PC4
H	−	Shut−off Valve	PC2~PC5
M1	1/8″	Modular Manifold Block Kit	PC2~PC3
M2	1/4″		PC2~PC4
M3	3/8″		PC4
V	−	Lock−out Valve	PC2~PC5
W	−	Modular Pipe Adapter Kit	PC2~PC5
Z1	−	Pressure Switch, AC110V	PC2~PC5
Z5	−	Pressure Switch, DC24V	PC2~PC5

✻Refer to page 900 for how to attach bracket & how to combine the accessories
✻When specitying more than one symbol, indicate them alphabetically Ex) CIMIZ

Other Option

Blank	Set at 0 to 1.0 MPa, 5㎛ (Standard)			
2	Set at 0 to 0.2 MPa	K	Built−in Check Valve	Note2)
4	Set at 0 to 0.4 MPa	R	Flow Direction : Right→Left	
12	Set at 0 to 1.2 MPa	T	Tamper Resistant Kit	Note2,3)
E	Non−Relieving Type	U	Regulator (Top Mounted)	
J2	Filter element − 20㎛	XC16	Copper−free	
J4	Filter element − 40㎛			

Note2) Refer to page 935 for Built−in Check Valve, Tamper Resistant Kit.
Note3) Separately packed, Not assembled.
✻If ordering more than one option, indicate symbols numerically then alphabetically Ex) 2EK
✻Over Max. pressure value can be set.

▣ Construction

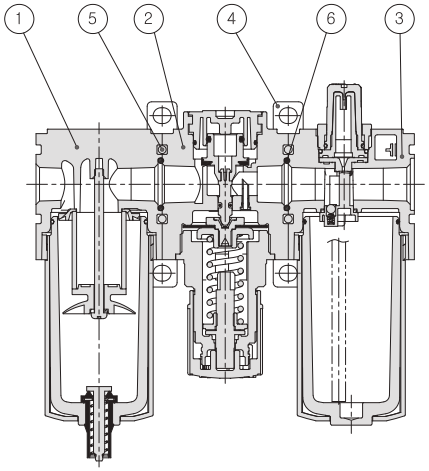

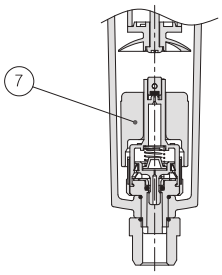

Auto-Drain Type

Main Parts/Parts List

No.	Description	Material	Remark
①	Filter Ass'y	–	
②	Regulator Ass'y	–	
③	Lubricator Ass'y	–	
④	Bracket Ass'y	Aluminum	
⑤	Connecting Screw	Carbon Steel	

Replacement Parts/Parts List

No.	Description	Material	Part No.
⑥	Combination O-ring	NBR	TAR4000-07-6001
⑦	Auto-drain ass'y	–	TAF3000-04A-6008

▣ PC3 Dimensions

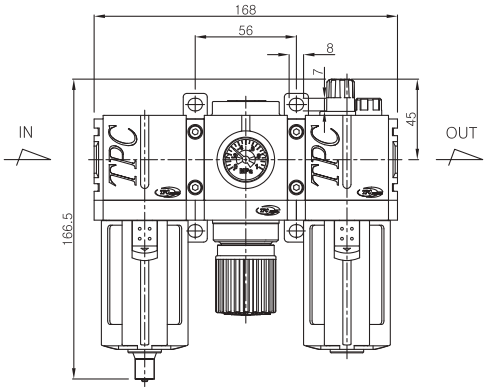

Filter Regulator Lubricator

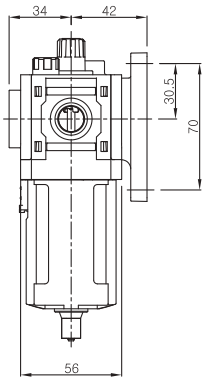

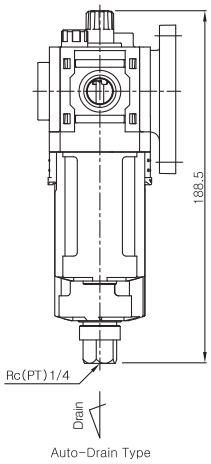

Auto-Drain Type

▣ PC3A Dimensions

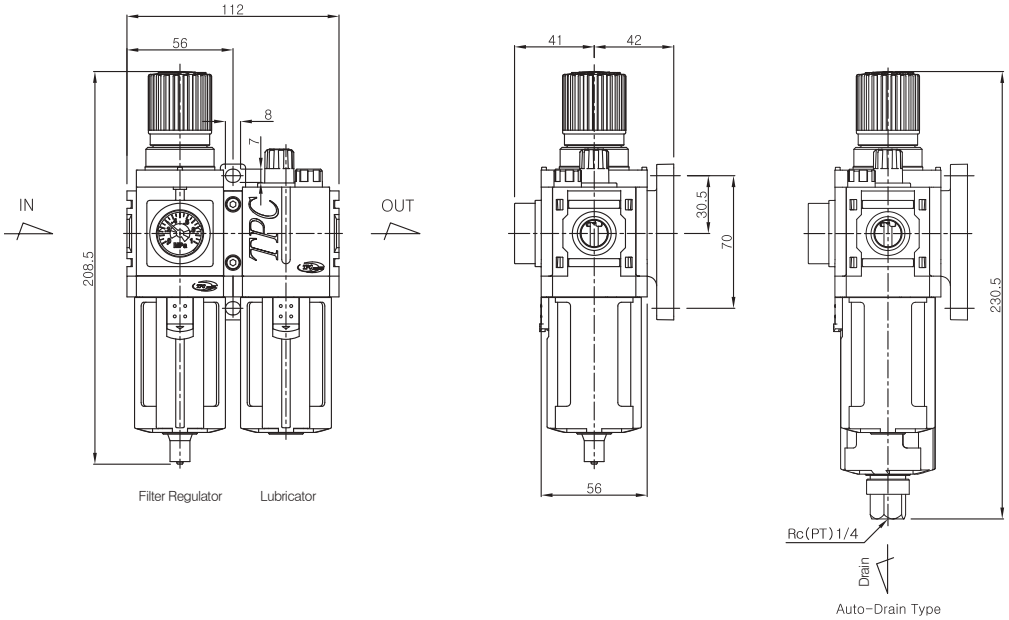

▣ PC3B Dimensions

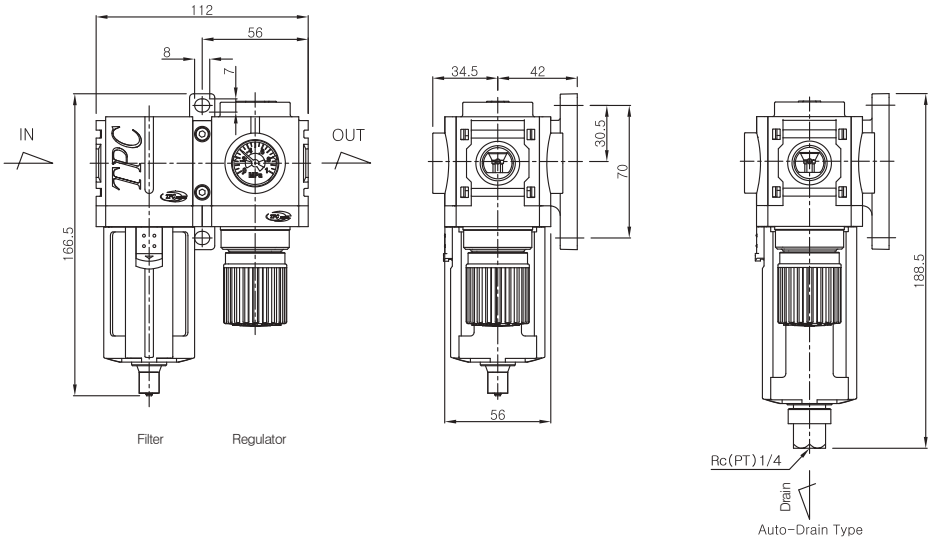

▣ PC3 Series Pressure Characteristics

▶ 1/4″ PC3

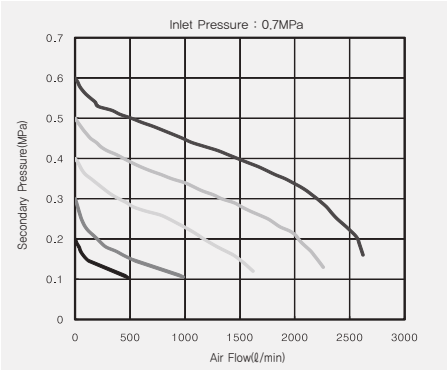

▶ 3/8″ PC3

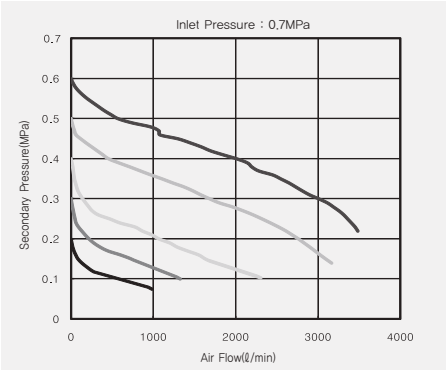

▶ 1/4″ PC3A

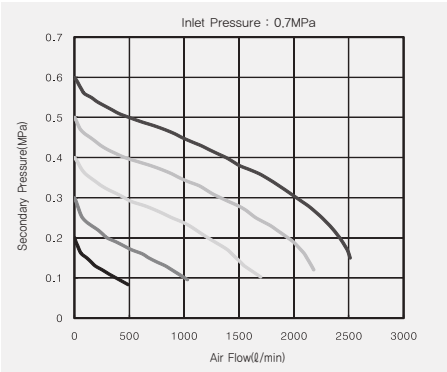

▶ 3/8″ PC3A

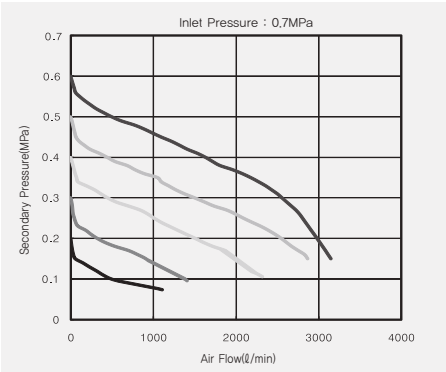

▣ PC3 Series Pressure Characteristics

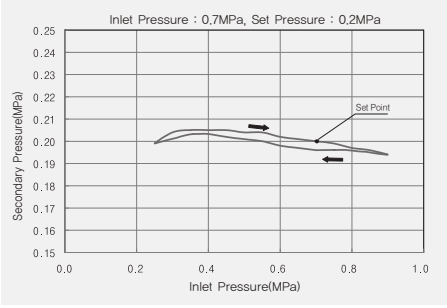

Series PF3

Filter 1/4″and 3/8″

▣ Standard Specifications

Fluid		Air
Max. Operating Pressure (MPa)		1.0(140psi)
Proof Pressure (MPa)		1.5(200psi)
Ambient and Fluid Temperature (℃)		−5~60(23~140°F)(Non−freezing)
Flow Capacity ※	1/4″	2,100(74scfm)
(N ℓ /min)	3/8″	3,100(109scfm)
Bowl Material		Polycarbonate
Bowl Guard Material		Nylon
Filtration (㎛)		5
Drain Capacity (㎤)		Manual Drain : 38(1.28oz), Auto Drain : 30(1.01oz)
Weight (kg)		0.24(0.53lb)

※ Test conditions : Supply pressure 0.6MPa(90psi), Pressure drop 0.07MPa(10psi)

Symbol

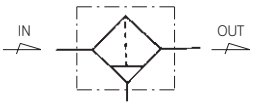

Air Filter

▣ How to Order

PF 3 — ＊ 03 B D — ＊

Series
(Filter Unit)

Thread

Blank	Rc(PT)
N	NPT
G	G(PF)

Port Size

02	1/4
03	3/8

Other Option

Blank	Filter element − 5㎛	R	Flow driection : Rigth → Left
J2	Filter element − 20㎛	XC16	Copper−free
J4	Filter element − 40㎛		

Drain Option

Blank	Manual Drain	
D	Auto Drain (N.O Type)	Note1)

Note1) Min. operating pressure for Auto drian (N.O Type) : 0.15MPa(20psi)

Bracket Option

Blank	None	
B	Bracket	Note2)

Note2) Separately packed, Not assembled.

▣ Construction

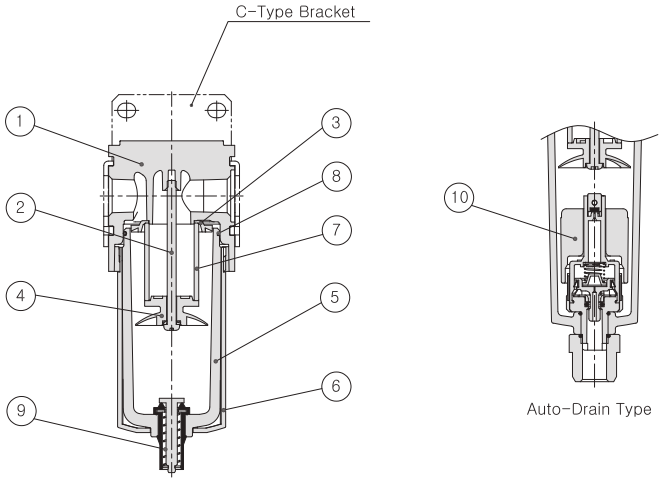

Main Parts/Parts List

No.	Description	Material	Remark
①	Body	Aluminum	
②	Baffle Screw	Rolled Steel	
③	Deflector	Nylon	
④	Baffle	Acetal	
⑤	Bowl	Polycarbonate	
⑥	Bowl Guard	Nylon	

Replacement Parts/Parts List

No.	Description	Material	Part No.
⑦	Filter element	Polyethylene	PF3-24-005-01
⑧	Bowl o-ring	NBR	PL3-04-001-01
⑨	Drain ass'y	–	TAF3000-10A-6004
⑩	Auto drain ass'y	–	TAF3000-04A-6008

▣ Dimensions

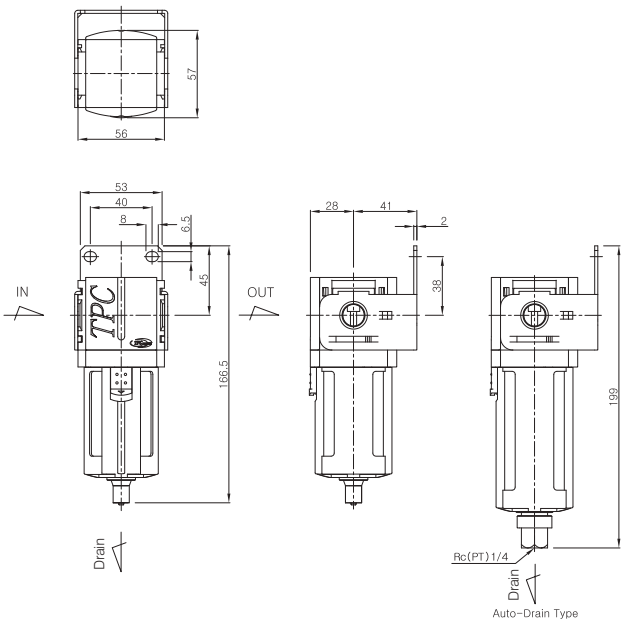

▣ Flow characteristics

▶ 1/4″ PF3

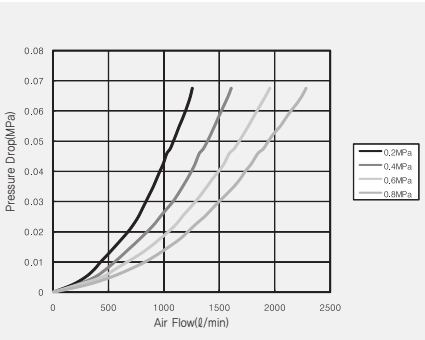

▶ 3/8″ PF3

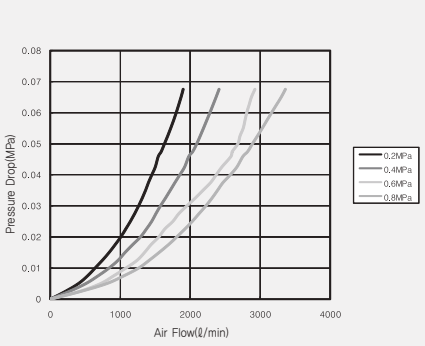

Series PR3

Regulator 1/4″and 3/8″

PAT

▣ Standard Specifications

Fluid		Air
Max. Operating Pressure (MPa)		1.0(140psi)
Proof Pressure (MPa)		1.5(200psi)
Set Pressure (MPa)	Standard	0.05~1.0(7~140psi)
	Made to Order Specifications	0.05~0.2(7~30psi), 0.05~0.4(7~60psi), 0.05~1.2(7~170psi)
Ambient and Fluid Temperature (℃)		−5~60(23~140°F)(Non−freezing)
Flow Capacity ※ (N ℓ /min)	1/4 ″	2,500(88scfm)
	3/8 ″	3,200(113scfm)
Construction		Relieving Style
Port Size for Pressure Gauge (Rc (PT), NPT)		1/8 ″
Weight (kg)		0.32(0.71lb)

※ Test conditions : Supply pressure 0.7MPa(100psi), pre−set pressure 0.6MPa(90psi)

Symbol

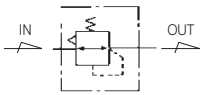

Regulator

▣ How to Order

PR 3 — ＊ 03 B G — ＊

Series
(Regulator Unit)

Thread

Blank	Rc(PT)
N	NPT
G	G(PF)

Port Size

02	1/4
03	3/8

Other Option

Blank	Set at 0 to 1.0 MPa, Standard	K	Built−in Check Valve	Note1)
2	Set at 0 to 0.2 MPa	R	Flow Direction : Right → Left	
4	Set at 0 to 0.4 MPa	T	Tamper Resistant Kit	Note1,2)
12	Set at 0 to 1.2 MPa	XC16	Copper−free	
E	Non−Relieving Type			

Note1) Refer to page 935 for Built−in Check Valve, Tamper Resistant Kit.
＊If ordering more than one option, indicate symbols numerically then alphabetically Ex) 2EK
＊Over Max. pressure value can be set.

Pressure Gauge

Symbol	Description	Pressure Range
Blank	None	
G	Integral Pressure Gauge (W/Limit Indicator)	1.0MPa
P	Pressure Gauge	1.0MPa
P2	Pressure Gauge	0.2MPa
P4	Pressure Gauge	0.4MPa

Bracket Option

Blank	None	
B	Bracket + Panel Nut	Note2)
B1	Panel Nut	

Note2) Separately packed, Not assembled.

▣ Construction

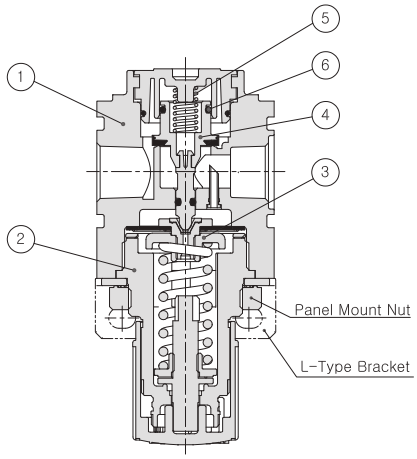

Main Parts/Parts List

No.	Description	Material	Remark
①	Body	Aluminum	
②	Bonnet	Nylon	

Replacement Parts/Parts List

No.	Description	Material	Part No.
③	Diaphragm Ass'y	Nylon+NBR	PR3-11A001-01
④	Valve Ass'y	Nylon+NBR	PP4-08A001-01
⑤	Valve Spring	Stainless Steel	PR3-14-001-01
⑥	Valve O-ring	NBR	PR3-04-001-01

▣ Dimensions

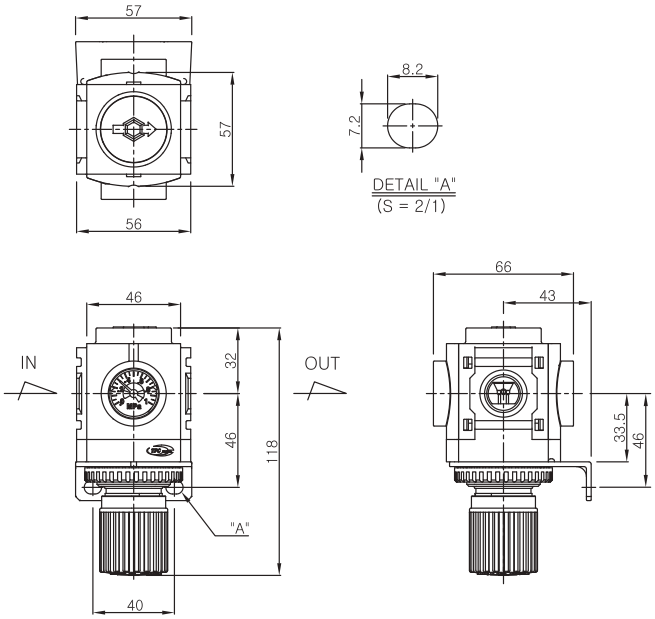

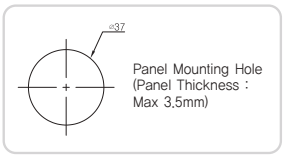

▣ Flow Characteristics

▶ 1/4″ PR3

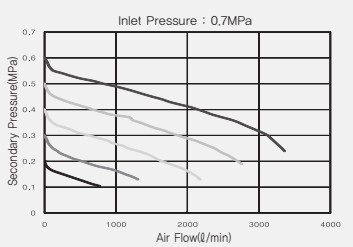

▶ 3/8″ PR3

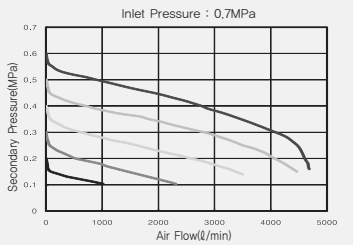

▣ Pressure Characteristics

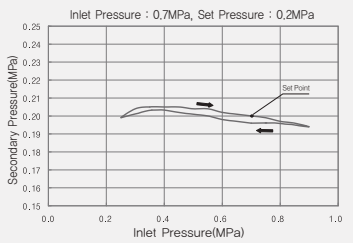

Series PL3

Lubricator 1/4″and 3/8″

▣ Standard Specifications

Fluid		Air
Max. Operating Pressure (MPa)		1.0(140psi)
Proof Pressure (MPa)		1.5(200psi)
Min Operation Flow (Nℓ/min)		40(3/8″)
Bowl Capacity (㎤)		56(1.89oz)
Ambient and Fluid Temperature (℃)		−5~60(23~140°F)(Non−freezing)
Flow Capacity ※	1/4″	2,100(74scfm)
(Nℓ/min)	3/8″	3,100(109scfm)
Bowl Material		Polycarbonate
Bowl Guard Material		Nylon
Recommended Oil		ISO VG32(Turbine Oil 1 Class)
Weight (kg)		0.26(0.57lb)

※ Test conditions : Supply pressure 0.6MPa(100psi), Pressure drop 0.05MPa(90psi)

Symbol

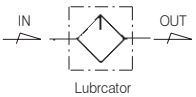

▣ How to Order

PL 3 — ＊ 03 B — ＊

Series
(Lubricator Unit)

Thread

Blank	Rc(PT)
N	NPT
G	G(PF)

Port Size

02	1/4
03	3/8

Other Option

R	Flow Direction : Right → Left
XC16	Copper−free

Bracket Option

Blank	None	
B	Bracket	Note1)

Note1) Separalely packed, Not assembled.

▣ Construction

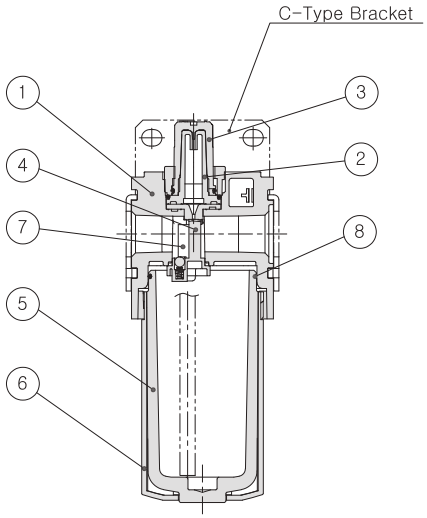

Main Parts/Parts List

No.	Description	Material	Remark
①	Body	Aluminum	
②	Inner Sight dome	Nylon(Transparent)	
③	Outer Sight dome	Nylon(Transparent)	
④	Damper Plate	Acetal	
⑤	Bowl	Polycarbonate	
⑥	Bowl Guard	Nylon	

Replacement Parts/Parts List

No.	Description	Material	Part No.
⑦	Damper	NBR	PL3-34-001-01
⑧	Bowl O-ring	NBR	PL3-04-001-01

▣ Dimensions

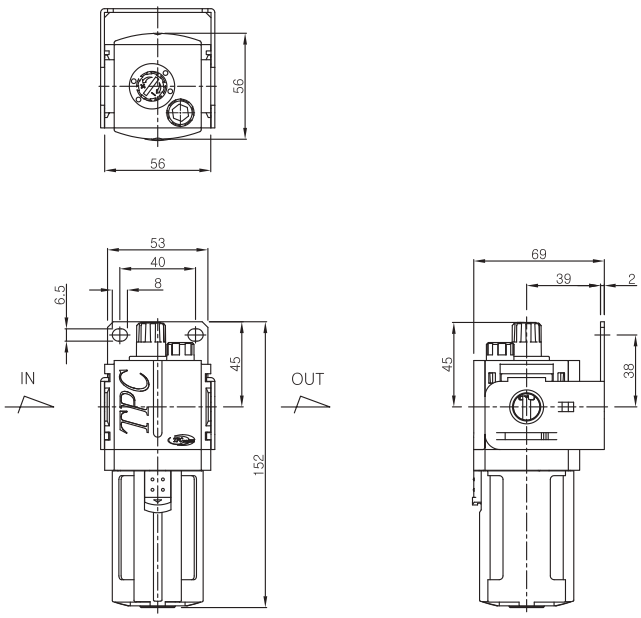

▣ Flow Characteristics

▶ 1/4″ PL3

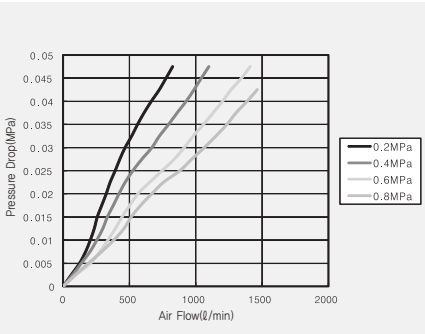

▶ 3/8″ PL3

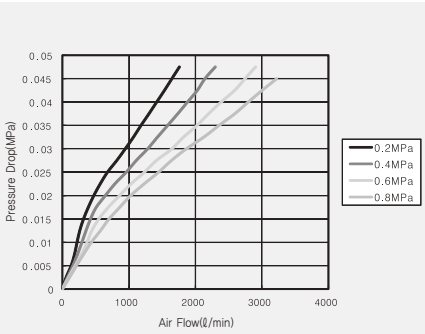

Series PP3

Piggyback 1/4″and 3/8″

Symbol

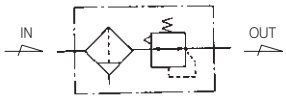

Piggy back

▣ Standard Specifications

Fluid		Air
Max. Operating Pressure (MPa)		1.0(140psi)
Proof Pressure (MPa)		1.5(200psi)
Set Pressure (MPa)	Standard	0.05~1.0(7~140psi)
	Made to Order Specifications	0.05~0.2(7~30psi), 0.05~0.4(7~60psi), 0.05~1.2(7~170psi)
Ambient and Fluid Temperature (℃)		−5~60(23~140°F)(Non−freezing)
Flow Capacity ※ (N ℓ /min)	1/4 ″	2,100(74scfm)
	3/8 ″	2,600(92scfm)
Filtration (㎛)		5
construction		Relieving Style
Bowl Material		Polycarbonate
Bowl Guard Material		Nylon
Drain Capacity (㎤)		Manual Drian : 38(1.28oz), Auto Drain : 30(1.01oz)
Weight (kg)		0.49(1.08lb)

※ Test conditions : Supply pressure 0.7MPa(100psi), pre−set pressure 0.6MPa(90psi)

▣ How to Order

PP 3 — ＊ 03 B D G — ＊

Series
(Piggyback Unit)

Thread

Blank	Rc(PT)
N	NPT
G	G(PF)

Port Size

02	1/4
03	3/8

Bracket Option

Blank	None	
B	Bracket + Panel Nut	Note2)
B1	Panel Nut	

Note2) Separately packed, Not assembled.

Other Option

Blank	Set at 0 to 1.0 MPa, 5㎛ (Standard)			
2	Set at 0 to 0.2 MPa	J4	Filter element − 40㎛	
4	Set at 0 to 0.4 MPa	K	Built−in Check Valve	Note1)
12	Set at 0 to 1.2 MPa	R	Flow Direction : Right → Left	
E	Non−Relieving Type	T	Tamper Resistant Kit	Note1,2)
J2	Filter element − 20㎛	XC16	Copper−free	

Note1) Refer to page 935 for Built−in Check Valve, Tamper Resistant Kit.
* If ordering more than one option, indicate symbols numerically then alphabetically Ex) 2EK
* Over Max. pressure value can be set.

Pressure Gauge

Symbol	Description	Pressure Range
Blank	None	
G	Integral Pressure Gauge (W/Limit Indicator)	1.0MPa
P	Pressure Gauge	1.0MPa
P2	Pressure Gauge	0.2MPa
P4	Pressure Gauge	0.4MPa

Drain Option

Blank	Manual Push Drain	
D	Auto Drain (N.O Type)	Note3)

Noet3) Min. operating pressure is 0.15MPa (20psi) for Auto Drain (N.O Type)

▣ Construction

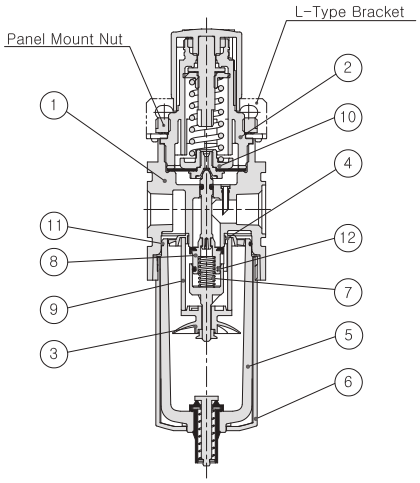

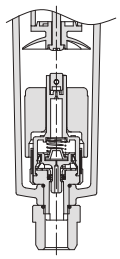

Auto-Drain Type

Main Parts/Parts List

No.	Description	Material	Remark
①	Body	Aluminum	
②	Bonnet	Nylon	
③	Baffle	Acetal	
④	Deflector	Nylon	
⑤	Bowl	Polycarbonate	
⑥	Bowl Guard	Nylon	
⑦	Valve Spring	Stainless Steel	

Replacement Parts/Parts List

No.	Description	Material	Part No.
⑧	Valve Ass'y	Nylon+NBR	PP3-08A001-01
⑨	Filter Element	Polyethylene	PF3-24-005-01
⑩	Diaphragm Ass'y	Nylon+NBR	PR3-11A001-01
⑪	Bowl O-ring	NBR	PL3-04-001-01
⑫	Valve O-ring	NBR	P10-01

▣ Dimensions

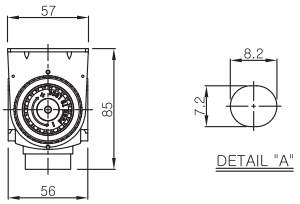

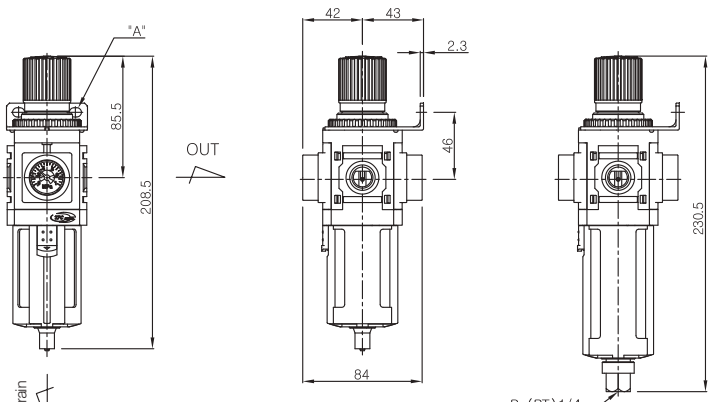

Auto-Drain Type

▣ Flow Characteristics

▶ 1/4″ PP3

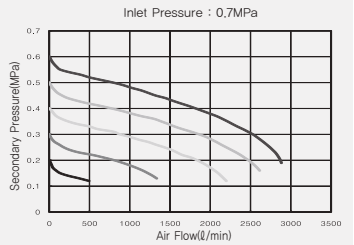

▶ 3/8″ PP3

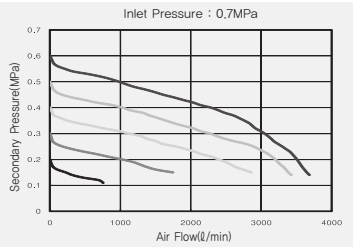

▣ Pressure Characteristics

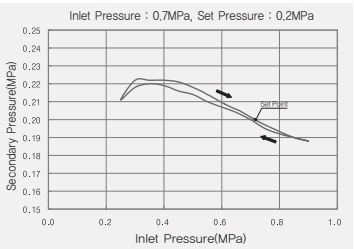

Series PC4

Combination 3/8″and 1/2″

Symbol

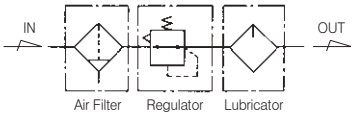

▣ Standard Specifications

Fluid		Air
Max. Operating Pressure (MPa)		1.0(140psi)
Proof Pressure (MPa)		1.5(200psi)
Set Pressure (MPa)	Standard	0.05~1.0(7~140psi)
	Made to Order Specifications	0.05~0.2(7~30psi), 0.05~0.4(7~60psi), 0.05~1.5(7~200psi)
Ambient and Fluid Temperature (℃)		−5~60(23~140°F)(Non−freezing)
Flow Capacity ※ (N ℓ /min)	3/8″	2,800(99scfm)
	1/2″	4,300(152scfm)
Filtration (㎛)		5
Construction		Relieving Style
Recommended Oil		ISO VG32(Turbine Oil 1 Class)
Port Size for Pressure Gauge (Rc (PT), NPT)		1/8″
Weight (kg)		1.88(4.14lb)

※ Test conditions : Supply pressure 0.7MPa(100psi), pre−set pressure 0.6MPa(90psi)

▣ How to Order

PC 4 A — ＊ 04 D G — ＊ — C3M3Z5

Series
(Combination Unit)

Components

Blank	Filter−Regulator−Lubricator
A	Piggyback−Lubricator
B	Filter−Regulator
C	Filter−Coalescing Filter(0.3)−Regulator
D	Piggyback−Coalescing Filter(0.3)
E	Filter−Coalescing Filter(0.01)−Regulator
F	Piggyback−Coalescing Filter(0.01)

Thread

Blank	Rc(PT)
N	NPT
G	G(PF)

Port Size

03	3/8
04	1/2

Drain Option

Blank	Manual Push Drain	
D	Auto Drain (N.O Type)	Note1)

Note1) Min. opreating pressure is 0.15MPa (20psi) for Auto Drain (N.O Type)

Pressure Gauge

Symbol	Description	Pressure Range
Blank	None	
G	Integral Pressure Gauge (W/Limit Indicator)	1.0MPa
P	Pressure Gauge	1.0MPa
P2	Pressure Gauge	0.2MPa
P4	Pressure Gauge	0.4MPa

Other Option

Blank	Set at 0 to 1.0 MPa, 5㎛ (Standard)			
2	Set at 0 to 0.2 MPa	K	Built−in Check Valve	Note2)
4	Set at 0 to 0.4 MPa	L	Life Indicator	
15	Set at 0 to 1.5 MPa	R	Flow Direction : Right → Left	
E	Non−Relieving Type	T	Tamper Resistant Kit	Note2,3)
J2	Filter element − 20㎛	U	Regulator (Top Mounted)	
J4	Filter element − 40㎛	XC16	Copper−free	

Note1) Refer to page 935 for Built−in Check Valve, Tamper Resistant Kit.
＊If ordering more than one option, indicate symbols numerically then alphabetically Ex) 2EK
＊Over Max. pressure value can be set.

Accessories

Symbol	Port Size	Description	Applicable Series
C1	1/8″	Check Valve	PC2~PC3
C2	1/4″		PC2~PC4
C3	3/8″		PC4
H	−	Shut−off Valve	PC2~PC5
M1	1/8″	Modular Manifold Block Kit	PC2~PC3
M2	1/4″		PC2~PC4
M3	3/8″		PC4
Note4) S	−	Slow Start Valve	PC4
V	−	Lock−out Valve	PC2~PC5
W	−	Modular Pipe Adapter Kit	PC2~PC5
Z1	−	Pressure Switch, AC110V	PC2~PC5
Z5	−	Pressure Switch, DC24V	PC2~PC5

＊Refer to page 900 for how to attach bracket & how to combine the accessories.
Note4) When specilying more than one symbol, indicate them alphabetically Ex) C3M3Z

▣ Construction

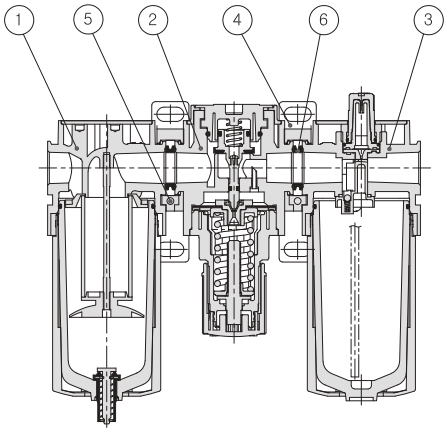

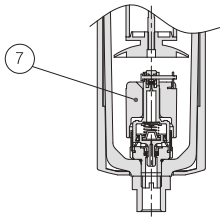

Auto-Drain Type

Main Parts/Parts List

No.	Description	Material	Remark
①	Filter Ass'y	–	
②	Regulator Ass'y	–	
③	Lubricator Ass'y	–	
④	Bracket Ass'y	Aluminum	
⑤	Connecting Screw	Carbon steel	

Replacement Parts/Parts List

No.	Description	Material	Part No.
⑥	Spacer O-ring	NBR	PC4A-04-001-01
⑦	Auto-Drain ass'y	–	TAF3000-04A-6008

▣ PC4 Dimensions

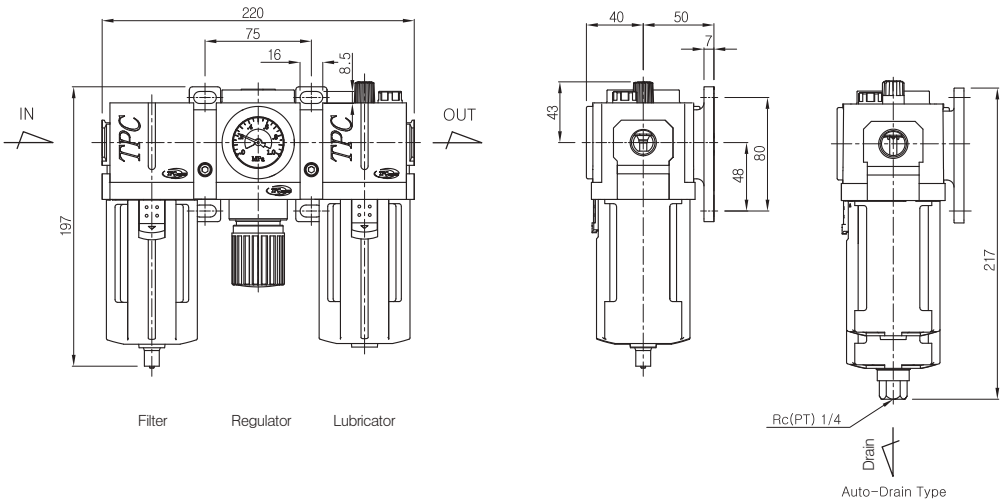

▣ PC4A Dimensions

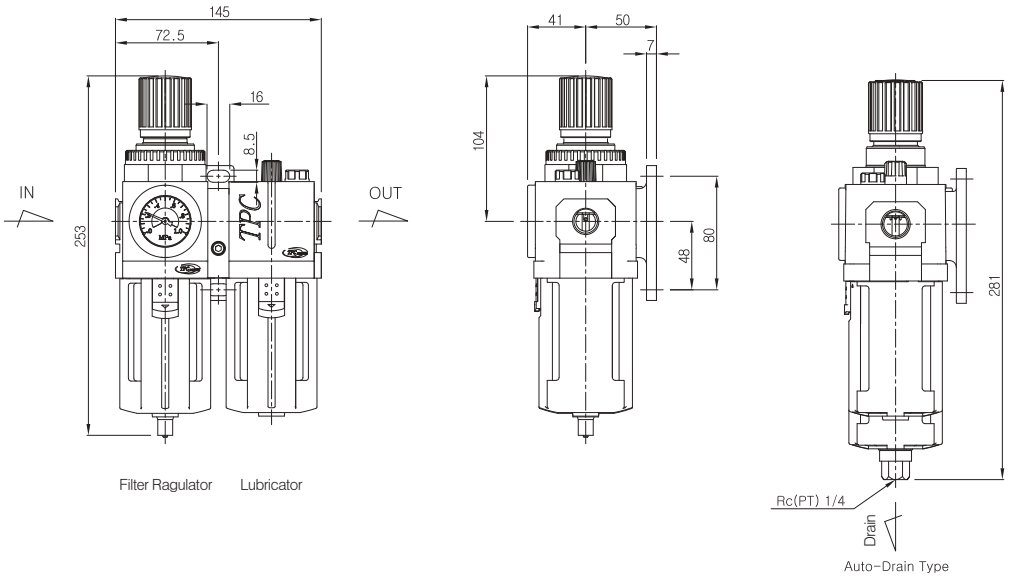

▣ PC4B Dimensions

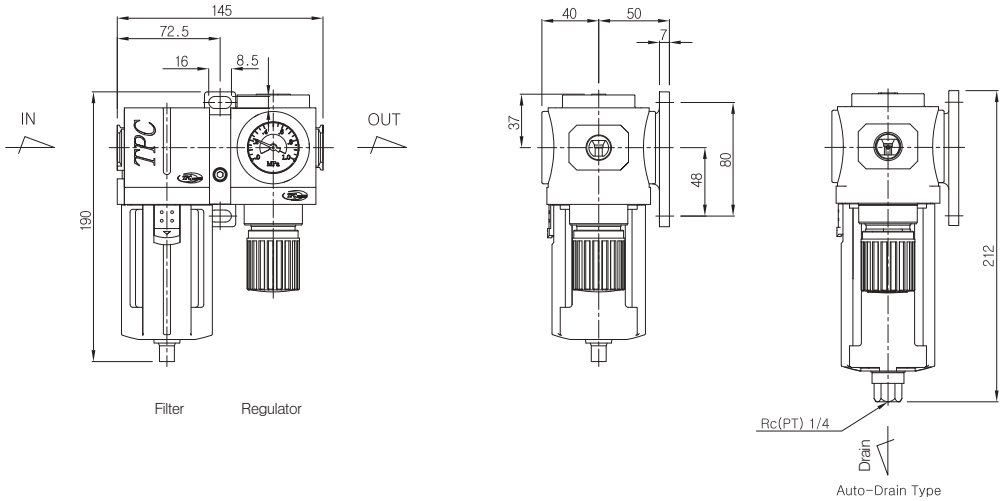

▣ PC4 Series Flow Characteristics

▶ 3/8″ PC4

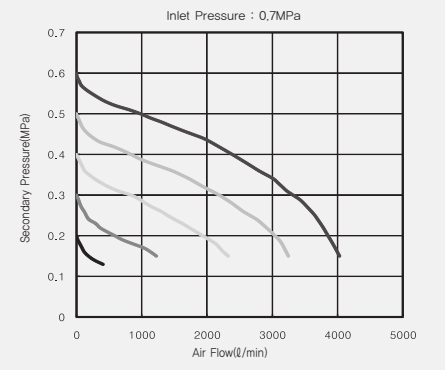

▶ 1/2″ PC4

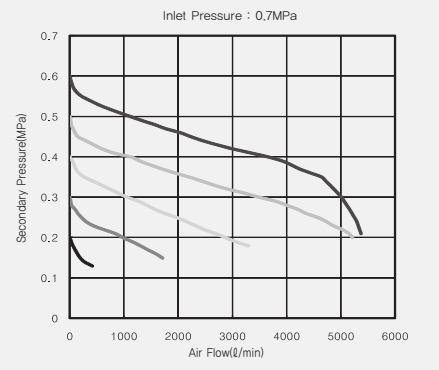

▶ 3/8″ PC4A

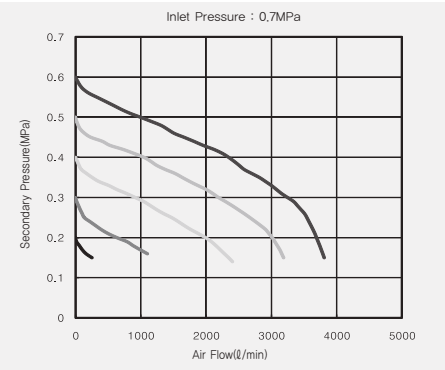

▶ 1/2″ PC4A

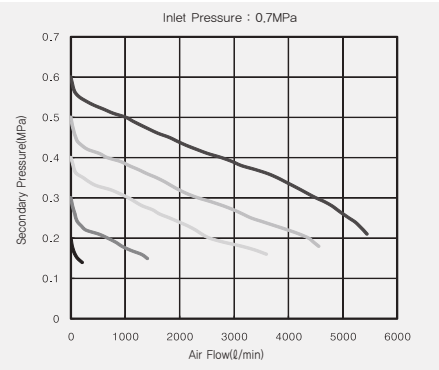

▣ PC4 Series Pressure Characteristics

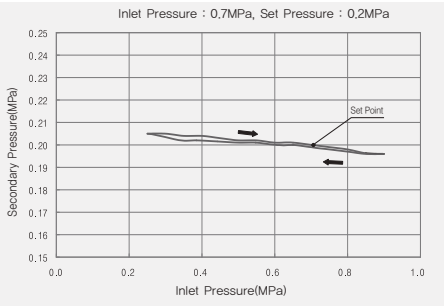

Series PF4

Filter 3/8″and 1/2″

▣ Standard Specifications

Fluid		Air
Max. Operating Pressure (MPa)		1.0(140psi)
Proof Pressure (MPa)		1.5(200psi)
Ambient and Fluid Temperature (℃)		−5~60(23~140°F)(Non−freezing)
Flow Capacity ※	3/8″	4,500(159scfm)
(Nℓ/min)	1/2″	5,600(198scfm)
Bowl Material		Polycarbonate
Bowl Guard Material		Nylon
Filtration (㎛)		5
Drain Capacity (㎤)		Manual Drain : 56(1.89oz), Auto Drain : 68(2.3oz)
Weight kg)		0.5

※ Test conditions : Supply pressure 0.6MPa(90psi), Pressurre drop 0.07MPa(10psi)

Symbol

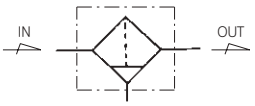

Air Filter

▣ How to Order

PF 4 — ＊ 04 B D — ＊

Series
(Filter Unit)

Thread

Blank	Rc(PT)
N	NPT
G	G(PF)

Port Size

03	3/8
04	1/2

Other Option

Blank	Filter element − 5㎛	L	Life Indicator
J2	Filter element − 20㎛	R	Flow Direction : Right → Left
J4	Filter element − 40㎛	XC16	Copper−free

Drain Option

Blank	Manual Drain	
D	Auto Drain (N.O Type)	Note1)

Note1) Min. operating pressure fo Auto drain (N.O Type)

Bracket Option

Blank	None	
B	Bracket	Note2)

Note2) Separately packet, Not assembled.

▣ Construction

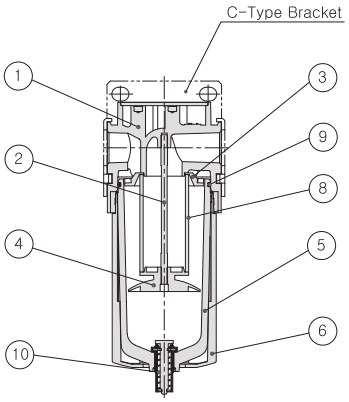

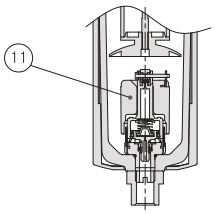

Auto-Drain Type

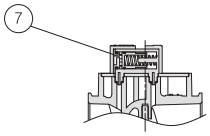

Life Indicator Type

Main Parts/Parts List

No.	Description	Material	Remark
①	Body	Aluminum	
②	Baffle Screw	Rolled Steel	
③	Deflector	Nylon	
④	Baffle	Acetal	
⑤	Bowl	Ploycarbonate	
⑥	Bowl Guard	Nylon	
⑦	Life Indicator	–	Option

Replacement Parts/Parts List

No.	Description	Material	Part No.
⑧	Filter Element	Polyethylne	PF4-24-005-01
⑨	Bowl O-ring	NBR	TAF4000-08-6000
⑩	Drain Ass'y	–	TAF3000-10A-6004
⑪	Auto Drain Ass'y	–	TAF3000-04A-6008

▣ Dimensions

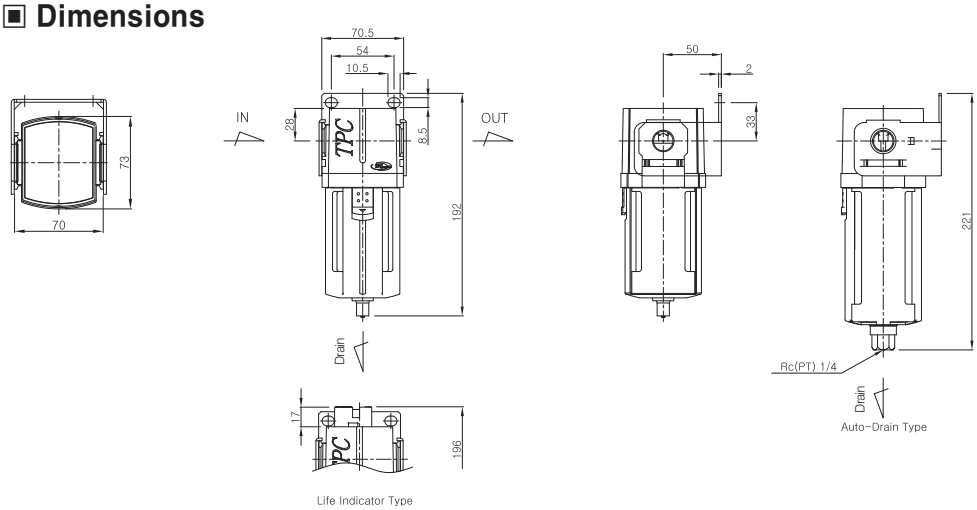

▣ Flow Characteristics

▶ 3/8″ PF4

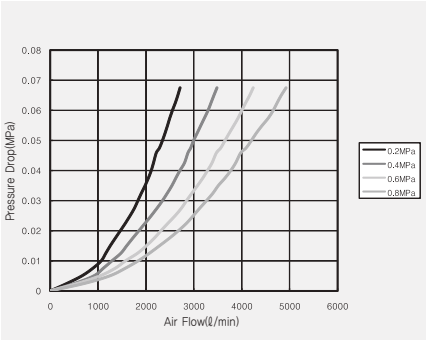

▶ 1/2″ PF4

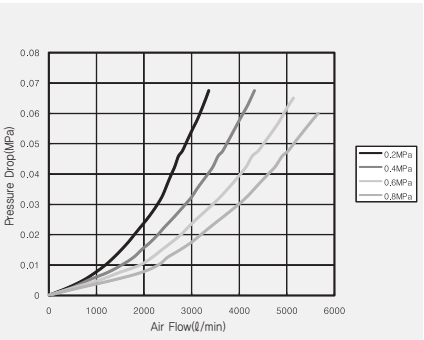

Series PR4

Regulator 3/8″ and 1/2″

▣ Standard Specifications

Fluid		Air
Max. Operating Pressure (MPa)		1.0(140psi)
Proof Pressure (MPa)		1.5(200psi)
Set Pressure (MPa)	Standard	0.05~1.0(7~140psi)
	Made to Order Specifications	0.05~0.2(7~30psi), 0.05~0.4(7~60psi), 0.05~1.5(7~200psi)
Ambient and Fluid Temperature (℃)		−5~60(23~140°F)(Non−freezing)
Flow Capacity ※ (N ℓ /min)	3/8″	5,100(99scfm)
	1/2″	7,700(152scfm)
Construction		Relieving Style
Port Size for Pressure Gauge (Rc (PT), NPT)		1/8″
Weight (kg)		0.56(4.14lb)

※ Test conditions : Supply pressure 0.7MPa(100psi), pre−set pressure 0.6MPa(90psi)

Symbol

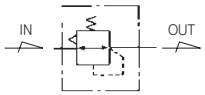

Regulator

▣ How to Order

PR 4 — ＊ 04 B G — ＊

Series
(Regulator Unit)

Thread

Blank	Rc(PT)
N	NPT
G	G(PF)

Port Size

03	3/8
04	1/2

Bracket Option

Blank	None	
B	Bracket + Panel Nut	Note1)
B1	Panel Nut	

Note1) Separately packed. Not assembled.

Pressure Gauge

Symbol	Description	Pressure Range
Blank	None	
G	Integral Pressure Gauge (W/Limit Indicator)	1.0MPa
P	Pressure Gauge	1.0MPa
P2	Pressure Gauge	0.2MPa
P4	Pressure Gauge	0.4MPa

Other Option

Blank	Set at 0 to 1.0 MPa (Standard)	K	Built−in Check Valve	Note1)
2	Set at 0 to 0.2 MPa	R	Flow Direction : Right → Left	
4	Set at 0 to 0.4 MPa	T	Tamper Resistant Kit	Note1,2)
15	Set at 0 to 1.5 MPa	XC16	Copper−free	
E	Non−Relieving Type			

Note1) Refer to page 935 for Built−in Check Valve, Tamper Resistant Kit.
＊If ordering more than one option, indicate symbols numerically then alphabetically Ex) 2EK
＊Over Max. pressure value can be set.

▣ Construction

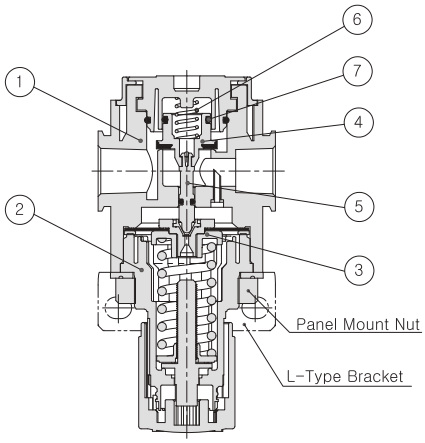

Main Parts/Parts List

No.	Description	Material	Remark
①	Body	Aluminum	
②	Bonnet	Nylon	

Replacement Parts/Parts List

No.	Description	Material	Part No.
③	Diaphragm Ass'y	Nylon+NBR	PR4-11A001-01
④	Valve Ass'y	Nylon+NBR	PR4-08A001-01
⑤	Valve Stem	Bress	PR4-09-001-01
⑥	Valve Spring	Stainless Steel	PR4-14-001-01
⑦	Valve O-ring	NBR	P15-01

▣ Dimensions

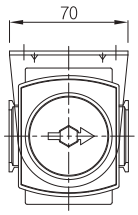

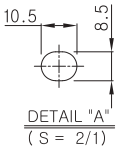

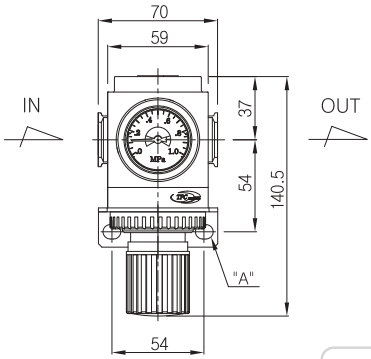

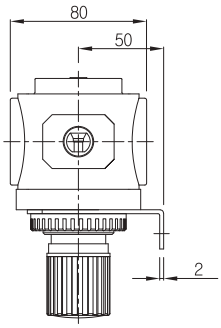

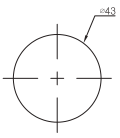

Panel mounting hole
(Panel thickness : Max 5mm)

▣ Flow Characteristics

▶ 3/8″ PR4

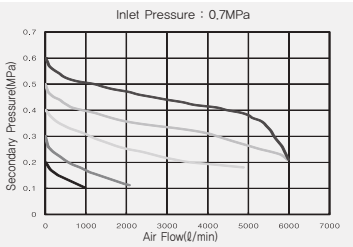

▶ 1/2″ PR4

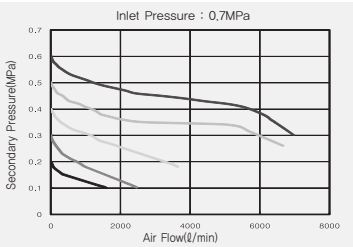

▣ Pressure Characteristics

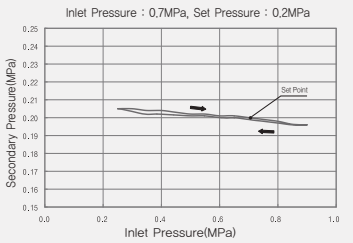

Series PL4

Lubricator 3/8″and 1/2″

▣ Standard Specifications

Fluid		Air
Max. Operating Pressure (MPa)		1.0(140psi)
Proof Pressure (MPa)		1.5(200psi)
Min Operating Flow (N ℓ /min)		50(1.8scfm)(1/2″)
Bowl Capacity (㎤)		127(4.29oz)
Ambient and Fluid Temperature (℃)		−5~60(23~140°F)(Non−freezing)
Flow Capacity ※	3/8″	2,400(85scfm)
(N ℓ /min)	1/2″	4,500(159scfm)
Bowl Material		Poly carbonate
Bowl Guard Material		Nylon
Recommended Oil		ISO VG32(Turbine oil 1 class)
Weight(kg)		0.54(1.19lb)

※ Test conditions : Supply pressure 0.6MPa(90psi), Pressure drop 0.05MPa(7psi)

Symbol

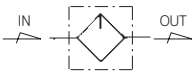

Lubricator

▣ How to Order

PL 4 — ✻ 04 B — ✻

Series
(Lubricator Unit)

Thread

Blank	Rc(PT)
N	NPT
G	G(PF)

Port Size

03	3/8
04	1/2

Other Option

R	Flow Direction : Right → Left
XC16	Copper−free

Bracket Option

Blank	None	
B	Bracket	Note1)

Note1) Separately packed.
Not assembled.

▣ Construction

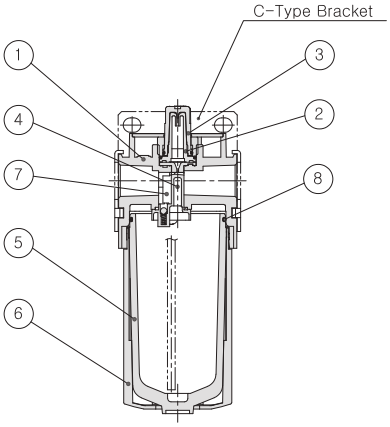

Main Parts/Parts List

No.	Description	Material	Remark
①	Body	Aluminum	
②	Inner Sight Dome	Nylon(Transparent)	
③	Outer Sight Dome	Nylon(Transparent)	
④	Damper Plate	Acetal	
⑤	Bowl	Polycarbonate	
⑥	Bowl Guard	Nylon	

Replacement Parts/Parts List

No.	Description	Material	Part No.
⑦	Damper	NBR	PL4000-14-6100-01
⑧	Bowl O-ring	NBR	TAF4000-08-6000

▣ Dimensions

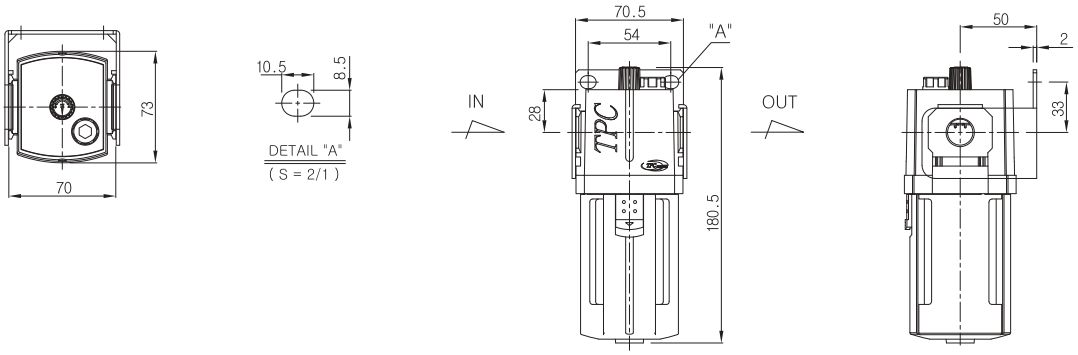

▣ Flow Characteristics

▶ 3/8″ PL4

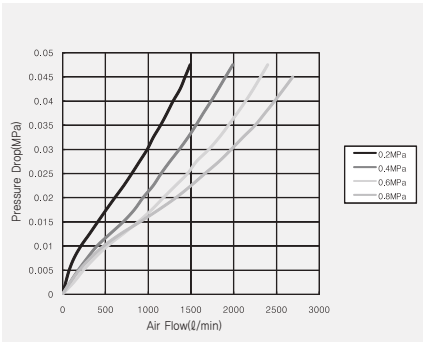

▶ 1/2″ PL4

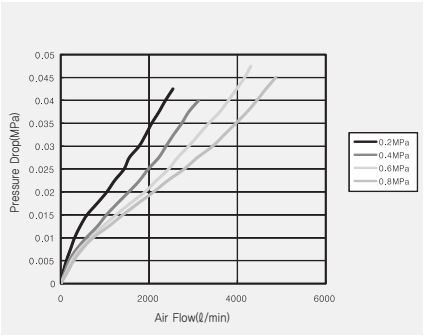

Series PP4

Piggyback 3/8″and 1/2″

Symbol

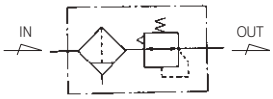

Piggy Back

▣ Standard Specifications

Fluid		Air
Max. Operating Pressure (MPa)		1.0(140psi)
Proof Pressure (MPa)		1.5(200psi)
Set Pressure (MPa)	Standard	0.05~1.0(7~140psi)
	Made to Order Specifications	0.05~0.2(7~30psi), 0.05~0.4(7~60psi), 0.05~1.5(7~200psi)
Ambient and Fluid Temperature (℃)		−5~60(23~140°F)(Non−freezing)
Flow Capacity ※ (N ℓ /min)	3/8 ″	3,800(134scfm)
	1/2 ″	4,700(166scfm)
Filtration (㎛)		5
Construction		Relieving Style
Bowl Material		Polycarbonate
Bowl Guard Material		Nylon
Drain Capacity (㎤)		Manual Drian : 56(1.89oz), Auto Drain : 68(2.3oz)
Weight (kg)		0.74(1.63lb)

※ Test conditions : Supply pressure 0.7MPa(100psi), pre−set pressure 0.6MPa(90psi)

▣ How to Order

PP 4 — ＊ 04 B D G — ＊

Series
(Piggyback Unit)

Thread

Blank	Rc(PT)
N	NPT
G	G(PF)

Port Size

03	3/8
04	1/2

Bracket Option

Blank	None	
B	Bracket + Panel Net	Note2)
B1	Panel Net	

Note1) Separately packed. Not assembled.

Other Option

Blank	Set at 0 to 1.0 MPa, 5㎛ (Standard)			
2	Set at 0 to 0.2 MPa	J4	Filter element − 40㎛	
4	Set at 0 to 0.4 MPa	K	Built-in Check Valve	Note1)
15	Set at 0 to 1.5 MPa	R	Flow Direction : Right → Left	
E	Non−Relieving Type	T	Tamper Resistant Kit	Note1,2)
J2	Filter element − 20㎛	XC16	Copper−free	

Note1) Refer to page 935 for Built-in Check Valve, Tamper Resistant Kit.
＊If ordering more than one option, indicate symbols numerically then alphabetically Ex) 2EK
＊Over Max. pressure value can be set.

Pressure Gauge

Symbol	Description	Pressure Range
Blank	None	
G	Integral Pressure Gauge (W/Limit Indicator)	1.0MPa
P	Pressure Gauge	1.0MPa
P2	Pressure Gauge	0.2MPa
P4	Pressure Gauge	0.4MPa

Drain Option

Blank	Manual Push Drain	
D	Auto Drain (N.O Type)	Note3)

Note3) Min. operationg pressure is 0.15MPa (20(psi) for Auto Drain (N.O Type)

▣ Construction

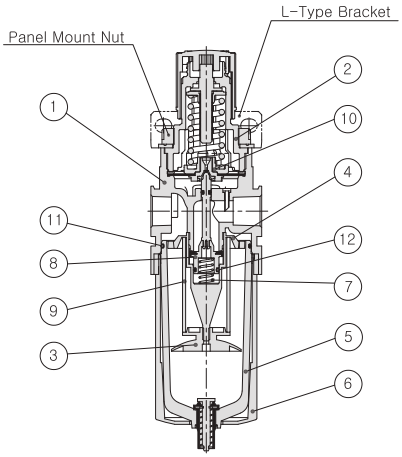

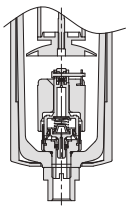

Auto-Drain Type

Main Parts/Parts List

No.	Description	Material	Remark
①	Body	Aluminum	
②	Bonnet	Nylon	
③	Baffle	Acetal	
④	Deflector	Acetal	
⑤	Bowl	Polycarbonate	
⑥	Bowl Guard	Nylon	
⑦	Valve Spring	Stainless Steel	

Replacement Parts/Parts List

No.	Description	Material	Part No.
⑧	Valve Ass'y	Nylon+NBR	PP4-08A001-01
⑨	Filter Element	Polyethylene	PF4-24-005-01
⑩	Diaphragm Ass'y	Nylon+NBR	PR4-11A001-01
⑪	Bowl O-ring	NBR	TAF4000-08-6000
⑫	Valve O-ring	NBR	PR3-04-001-01

▣ Dimensions

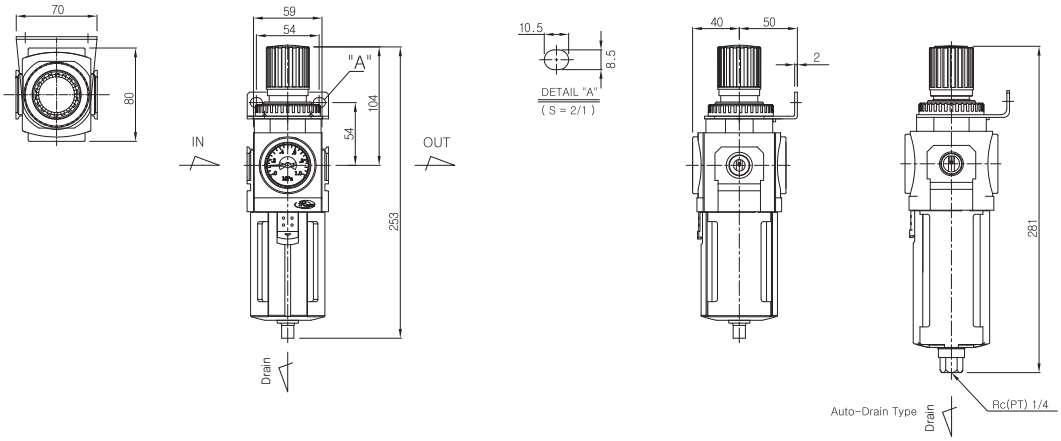

▣ Flow Characteristics

▶ 3/8″ PP4

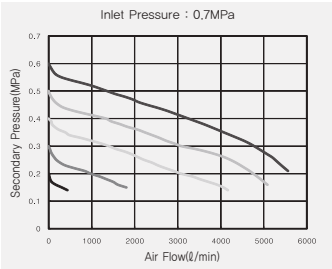

▶ 1/2″ PP4

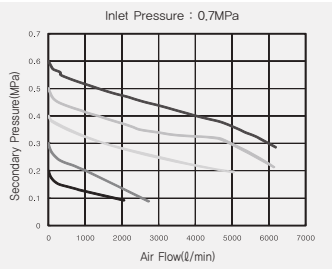

▣ Pressure Characteristics

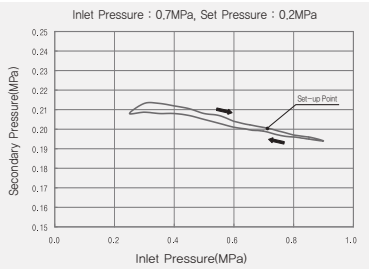

www.TPCpage.com
www.TPCpage.co.kr

Series PC5

Combination 3/4″and 1″

Symbol

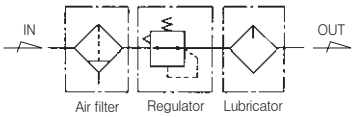

▣ Standard Specifications

Fluid		Air
Max. Operating Pressure (MPa)		1.0(140psi)
Proof Pressure (MPa)		1.5(200psi)
Set Pressure Range(MPa)	Standard	0.05 ~ 1.0(7~140psi)
	Madd to Order Specifications	0.05~0.2(7~30psi), 0.05~0.47(7~60psi), 0.05~1.5(7~200psi)
Ambient and Fluid Temperature (℃)		−5~60(23~140°F) (Non−freezing)
Flow Capacity ※ (N ℓ /min)	3/4″	5,700(201scfm)
	1″	6,100(215scfm)
Filtration (㎛)		5
Construction		Relieving Sytle
Recommended Oil		ISO VG32 (Turbine Oil 1 Class)
Port Size for Pressure Gauge (Rc (PT), NPT)		1/8″
Weight (kg)		4.06(8.95lb)

※ Test conditions : Supply pressure 0.7MPa(100psi), pre−set pressure 0.6MPa(90psi)

▣ How to Order

PC 5 A — ＊ 10 D G — ＊ — VWZ

Series
(Combination Unit)

Components

Blank	Filter−Regulator−Lubricator
A	Piggyback−Lubricator
B	Filter−Regulator
C	Filter−Coalescing Filter(0.3)−Regulator
D	Piggyback−Coalescing Filter(0.3)
E	Filter−Coalescing Filter(0.01)−Regulator
F	Piggyback−Coalescing Filter(0.01)

Thread

Blank	Rc(PT)
N	NPT
G	G(PF)

Port Size

06	3/4
10	1

Drain Option

Blank	Manual Drain
D	Auto Drain (N.O Type)

Note1)

Note1) Min. operating pressure is 0.15MPa(20psi) for Auto Drain (N.O Type)

Pressure Gauge

Symbol	Descripition	Pressure Range
Blank	None	
G	Integral Pressure Gauge (W/Limit Indicator)	1.0MPa(140psi)
P	Pressure Gauge	1.0MPa(140psi)
P2	Pressure Gauge	0.2MPa(30psi)
P4	Pressure Gauge	0.4MPa(60psi)

Accessories

Symbol	Port Size	Description	Applicable Series
C1	1/8″	Check Valve	PC2~PC3
C2	1/4″		PC2~PC4
C3	3/8″		PC4
H	−	Shut−off Valve	PC2~PC5
M1	1/8″	Modular Manifold Block Kit	PC2~PC3
M2	1/4″		PC2~PC4
M3	3/8″		PC4
V	−	Lock−out Valve	PC2~PC5
W	−	Modular Pipe Adapter Kit	PC2~PC5
Z1	−	Pressure Switch, AC110V	PC2~PC5
Z5	−	Pressure Switch, DC24V	PC2~PC5

＊Refer to page 900 or how to attach bracket & how to combine the accessores
＊When specifying more than one symbol, indicate them alphabetically Ex) CIMIZ

Other Option

Blank	Set at 0 to 1.0 MPa, 5㎛ (Standard)			
2	Set at 0 to 0.2 MPa	K	Built−in Check Valve	Note1)
4	Set at 0 to 0.4 MPa	L	Life Indicator	
15	Set at 0 to 1.5 MPa	R	Flow direction : Right→Left	Note2,3)
E	Non−relieving type	T	Tamper Resistant Kit	
J2	Filter element − 20㎛	U	Regulator (Top mounted)	
J4	Filter element − 40㎛	XC16	Copper−free	

Note2) Refer to page 935 for Built−in check valve, Tamper resistant kit.
Note3) Separately packed, Not assembled.
＊If ordering more than one option, indicate symbols numerically then aiphabetically Ex) 2EK
＊Over Max. pressure value can be set.

▣ Construction

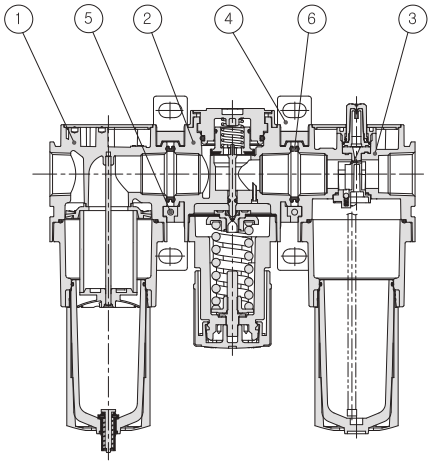

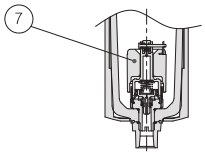

Auto-Drain Type

Main Parts/Parts List

NO.	Description	Material	Remark
①	Filter ass'y	–	
②	Regulator ass'y	–	
③	Lubricator ass'y	–	
④	Bracket ass'y	Aluminum	
⑤	Connecting screw	Carbon Steel	

Replacement Parts/Parts List

NO.	Description	Material	Part No.
⑥	Spacer O-ring	NBR	PC5-04-001-01
⑦	Auto-drain ass'y	–	TAF3000-04A-6008

▣ PC5 Dimensions

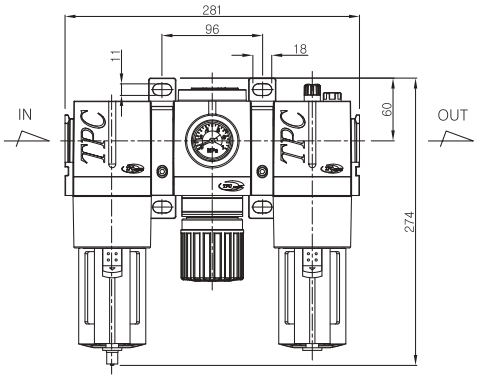

Filter Regulator Lubricator

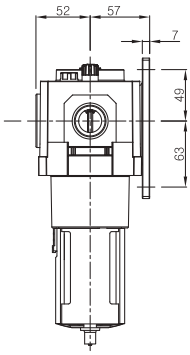

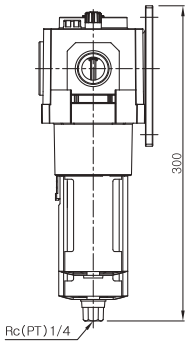

Auto-Drain Type

▣ PC5A Dimensions

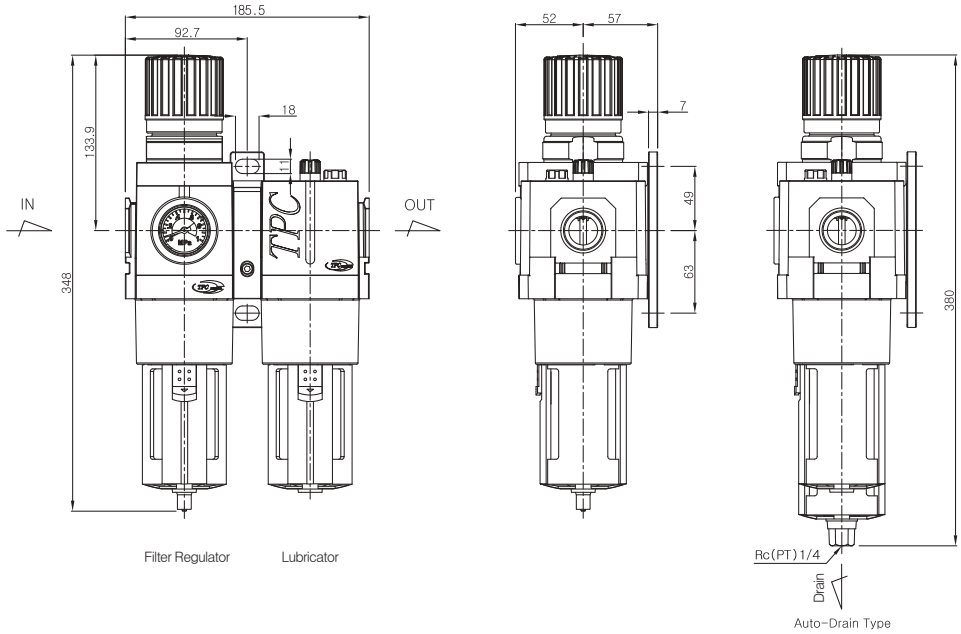

▣ PC5B Dimensions

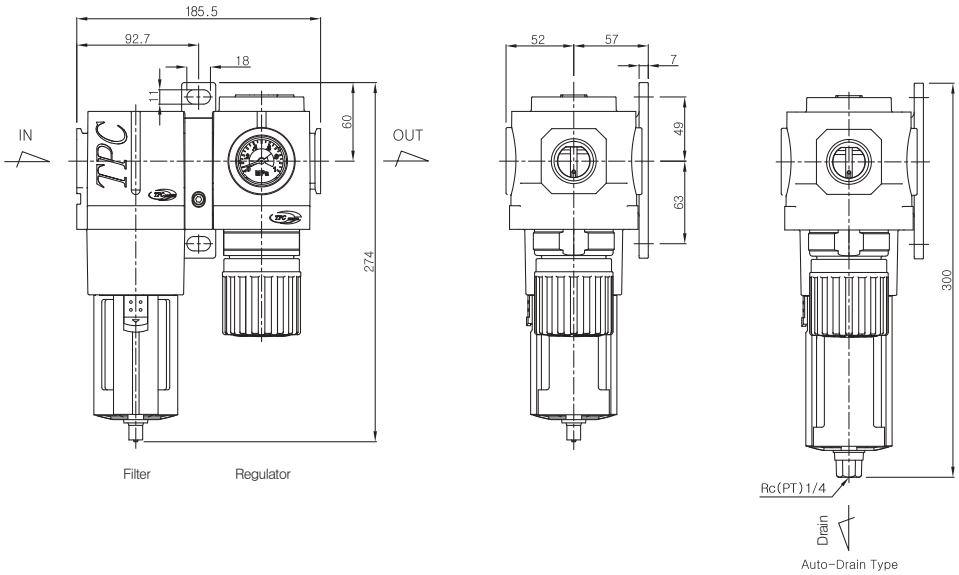

▣ PC5 Series Flow Characteristics

▶ 3/4″ PC5

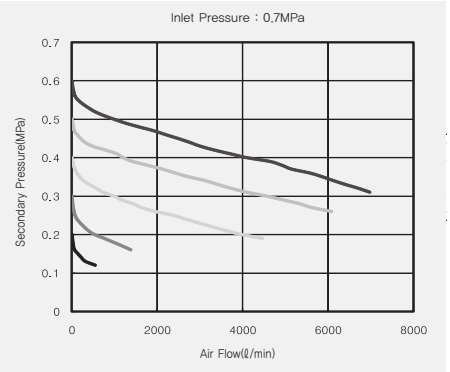

▶ 1″ PC5

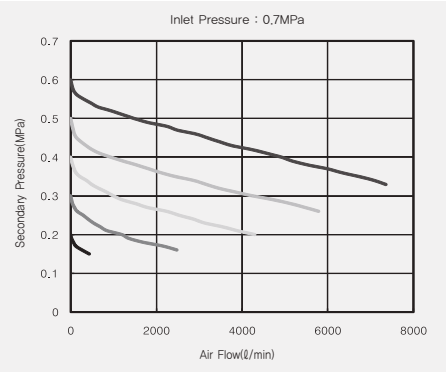

▶ 3/4″ PC5A

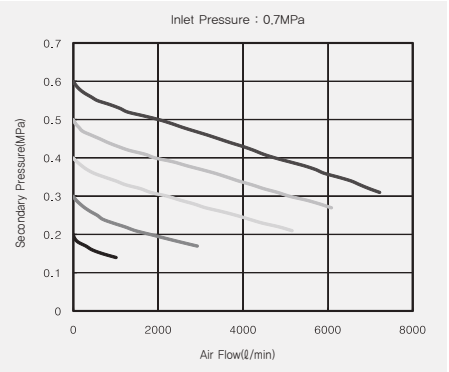

▶ 1″ PC5A

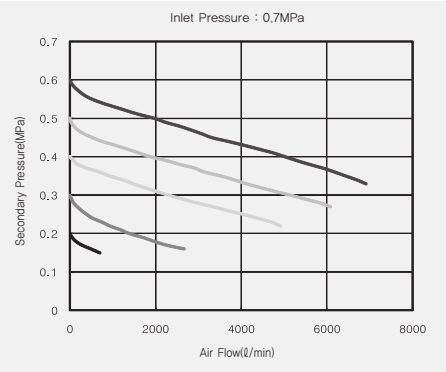

▣ PC5 Series Pressure Characteristics

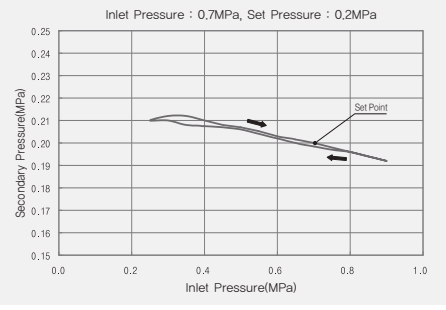

Series PF5

Filter 3/4″and 1″

▣ Standard Specifications

Fluid		Air
Max. Operating Pressure (MPa)		1.0(140psi)
Proof Pressure (MPa)		1.5(200psi)
Ambient and Fluid Temperature (℃)		−5~60(23~140°F) (Non−freezing)
Flow Capacity ※	3/4″	8,200(290scfm)
(Nℓ/min)	1″	9,600(339scfm)
Bowl Material		Polycarbonte
Bowl Guard Material		Nylon
Filtration (㎛)		5
Drain Capacity (㎤)		Manual Drain : 156(5.27oz), Auto Drain : 174(5.88oz)
Weight (kg)		1.10(2.43lb)

※ Test conditions : Supply pressure 0.6MPa(90psi), pressure drop 0.07MPa(10psi)

Symbol

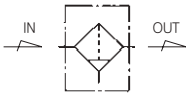

Air Filter

▣ How to Order

PF 5 — ＊ 10 B D — ＊

Series
(Filter Unit)

Thread

Blank	Rc(PT)
N	NPT
G	G(PF)

Port Size

06	3/4
10	1

Other Option

Blank	Filter element − 5㎛	L	Life Indicator
J2	Filter element − 20㎛	R	Flow direction : Right→Left
J4	Filter element − 40㎛	XC16	Copper−free

Drain Option

Blank	Manual Drain	
D	Auto Drain (N.O Type)	Note1)

Note1) Min. operating pressure is 0.15MPa(20psi) for Auto Drain (N.O Type)

Bracket Option

Blank	None	
B	Bracket	Note2)

Note2) Separately packed, Not assembled.

▣ Construction

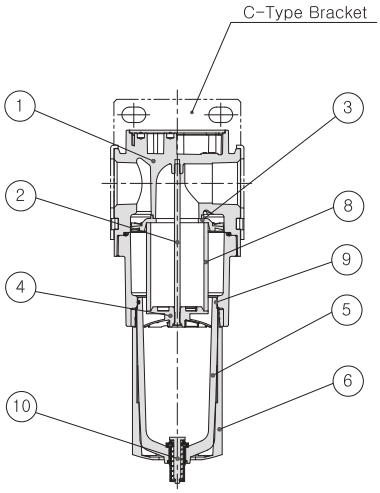

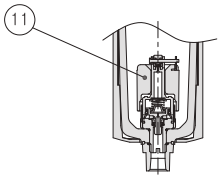

Auto-Drain Type

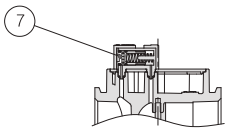

Life Indicator Type

Main Parts/Parts List

NO.	Description	Material	Remark
①	Body	Aluminum	
②	Baffle Screw	Rolled Steel	
③	Deflector	Nylon	
④	Baffle	Acetal	
⑤	Bowl	Polycarbonate	
⑥	Bowl Guard	Nylon	
⑦	Life Indicator	–	Option

Replacement Parts/Parts List

NO.	Description	Material	Part No.
⑧	Filter Element	Polyethylene	PF5-24-005-01
⑨	Bowl O-ring	NBR	TAF4000-08-6000
⑩	Drain Ass'y	–	TAF3000-10A-6004
⑪	Auto Drain Ass'y	–	TAF3000-04A-6008

▣ Dimensions

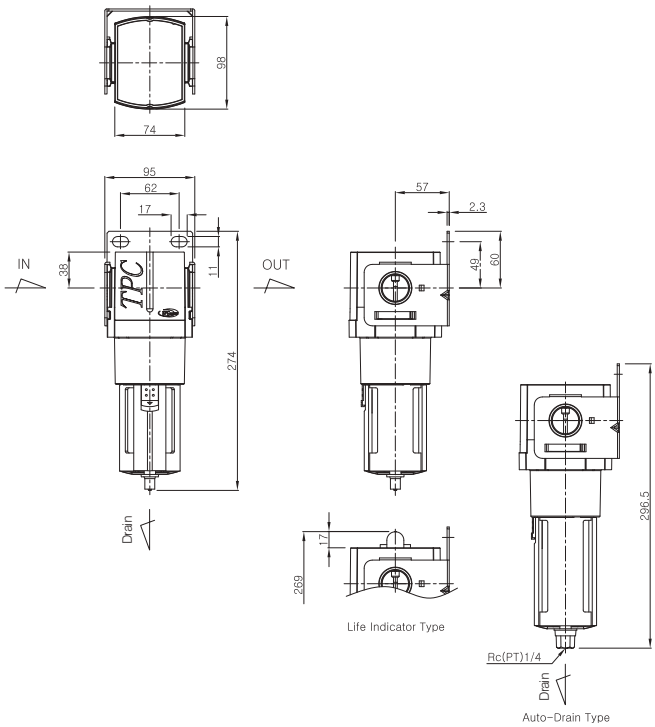

▣ Flow Characteristics

▶ 3/4″ PF5

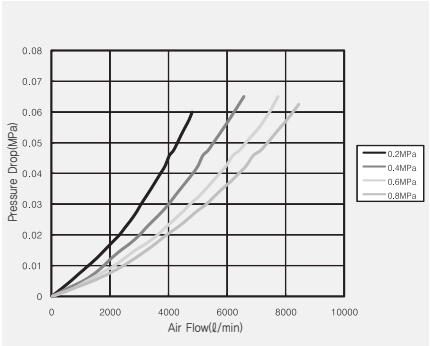

▶ 1″ PF5

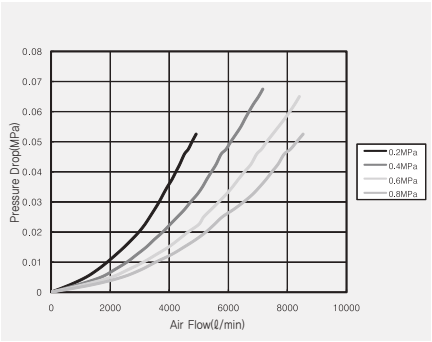

Series PR5

Regulator 3/4″and 1″

PAT

▣ Standard Specifications

Fluid		Air
Max. Operating Pressure (MPa)		1.0(140psi)
Proof Pressure (MPa)		1.5(200psi)
Set Pressure Range(MPa)	Standard	0.05~1.0
	Madd to Order Specifications	0.05~0.2(7~30psi), 0.05~0.47(7~60psi), 0.05~1.5(7~200psi)
Ambient and Fluid Temperature (℃)		−5~60(23~140°F) (Non−freezing)
Flow Capacity ※ (N ℓ /min)	3/4 ″	8,200(290scfm)
	1 ″	9,600(339scfm)
Construction		Relieving Sytle
Port Size for Pressure Gauge (Rc (PT), NPT)		1/8 ″
Weight(kg)		1.46(2.43lb)

※ Test conditions : Supply pressure 0.7MPa(100psi), pre−set pressure 0.6MPa(90psi)

Symbol

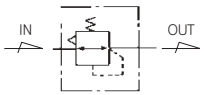

Regulator

▣ How to Order

PR 5 — ＊ 10 B G — ＊

Series
(Regulator Unit)

Thread

Blank	Rc(PT)
N	NPT
G	G(PF)

Port Size

06	3/4
10	1

Bracket Option

Blank	None	
B	Bracket + Panel Nut	Note2)
B1	Panel Nut	

Note2) Separately packed, Not assembled.

Other Option

Blank	Set at 0 to 1.0 MPa, Standard	K	Built−in Check Valve	Note1)
2	Set at 0 to 0.2 MPa	R	Flow direction : Right→Left	Note1,2)
4	Set at 0 to 0.4 MPa	T	Tamper Resistant Kit	
15	Set at 0 to 1.5 MPa	XC16	Copper−free	
E	Non−Relieving Type			

Note1) Refer to page 935 for Built−in check valve, Tamper resistant kit.
＊If ordering more than one option, indicate symbols numerically then aiphabetically Ex) 2EK
＊Over Max. pressure value can be set.

Pressure Gauge

Symbol	Descripition	Pressure Range
Blank	None	
G	Integral Pressure Gauge (W/Limit Indicator)	1.0MPa
P	Pressure Gauge	1.0MPa
P2	Pressure Gauge	0.2MPa
P4	Pressure Gauge	0.4MPa

▣ Construction

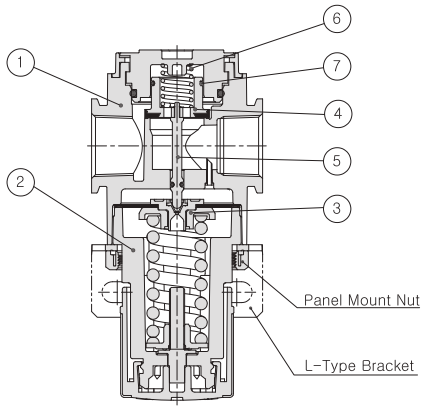

Main Parts/Parts List

NO.	Description	Material	Remark
①	Body	Aluminum	
②	Bonnet	Aluminum	

Replacement Parts/Parts List

NO.	Description	Material	Part No.
③	Diaphragm Ass'y	Aluminum+NBR	PR5-11A001-01
④	Valve Ass'y	Nylon+NBR	PR5-08A001-01
⑤	Valve Stem	Brass	PR5-09-001-01
⑥	Valve Spring	Stainless Steel	PR5-14-001-01
⑦	Valve O-ring	NBR	S24-01

▣ Dimensions

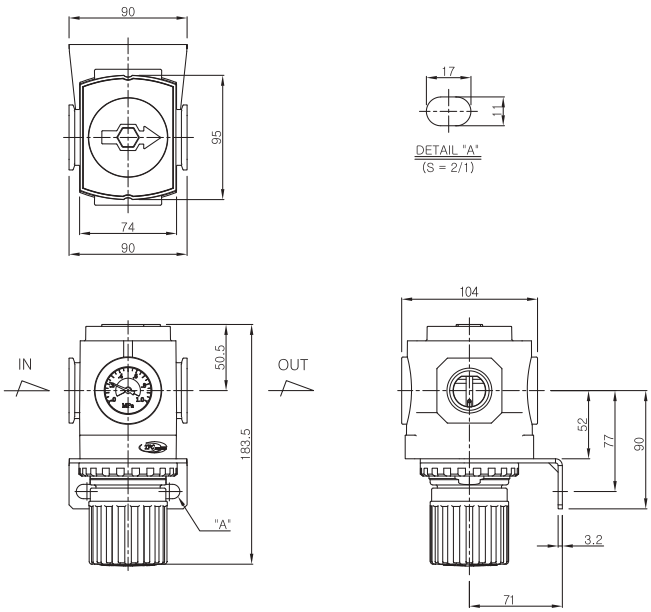

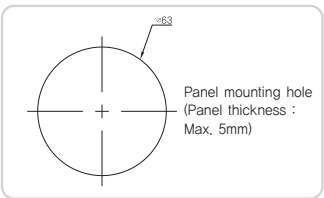

▣ Flow Characteristics

▶ 3/4″ PR5

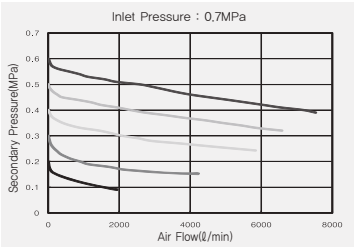

▶ 1″ PR5

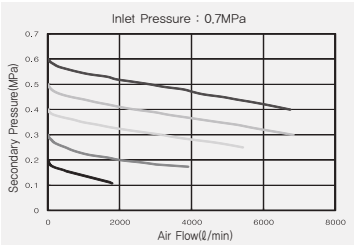

▣ Pressure Characteristics

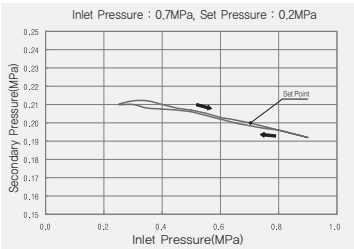

Series PL5

Lubricator 3/4″and 1″

▣ Standard Specifications

Fluid		Air
Max. Operating Pressure (MPa)		1.0(140psi)
Proof Pressure (MPa)		1.5(200psi)
Min Operating Flow (N ℓ /min)		150(5.3scfm)(1 ″)
Bowl Capacity (㎤)		109(3.69oz)
Ambient and Fluid Temperature (℃)		−5~60(23~140°F) (Non−freezing)
Flow Capacity ※	3/4 ″	9,400(332scfm)
(N ℓ /min)	1 ″	9,900(350scfm)
Bowl Material		Polycarbonte
Bowl Guard Material		Nylon
Recommended Oil		ISO VG32(Turbine Oil 1 Class)
Weight(kg)		1.08(2.38lb)

※ Test conditions : Supply pressure 0.6MPa(90psi), pressure drop 0.05MPa(7psi)

Symbol

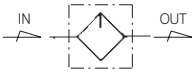

Lubricator

▣ How to Order

PL 5 — ✻ 10 B — ✻

Series
(Lubricator Unit)

Thread

Blank	Rc(PT)
N	NPT
G	G(PF)

Port Size

06	3/4
10	1

Other Option

R	Flow direction : Right→Left
XC16	Copper−free

Bracket Option

Blank	None	
B	Bracket	Note1)

Note2) Separately packed,
Not assembled.

▣ Construction

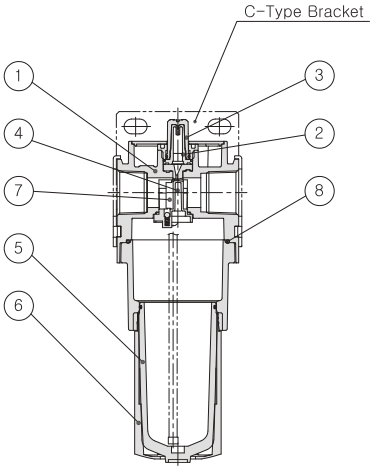

Main Parts/Parts List

NO.	Description	Material	Remark
①	Body	Aluminum	
②	Inner Sight dome	Nylon(Transparent)	
③	Outer Sight dome	Nylon(Transparent)	
④	Damper Plate	Acetal	
⑤	Bowl	Polycarbonate	
⑥	Bowl Guard	Nylon	

Replacement Parts/Parts List

NO.	Description	Material	Part No.
⑦	Damper	NBR	PL5-34-001-01
⑧	Bowl O-ring	NBR	TAF4000-08-6000

▣ Dimensions

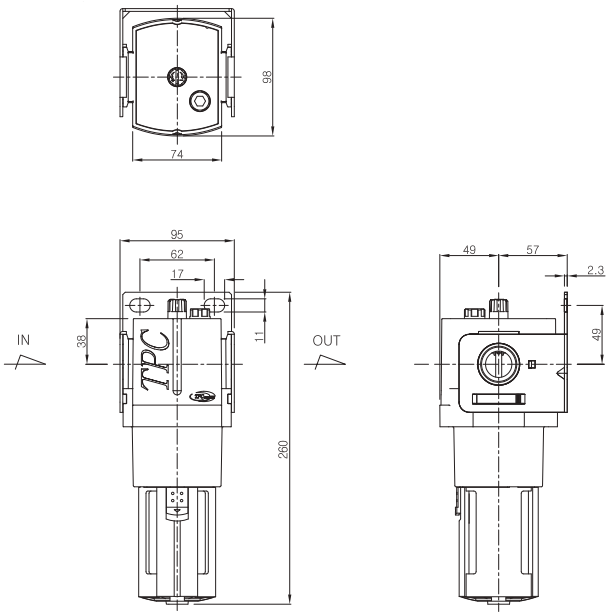

▣ Flow Characteristics

▶ 3/4″ PL5

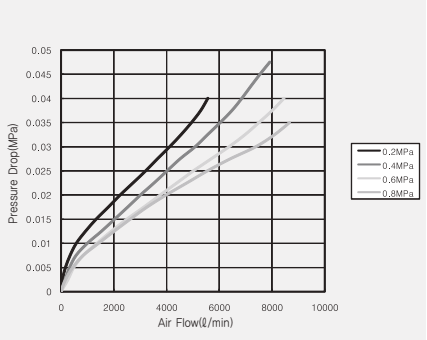

▶ 1″ PL5

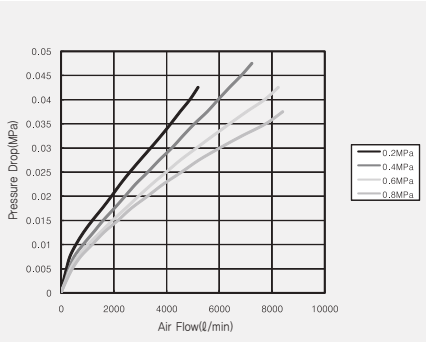

Series PP5

Piggyback 3/4″and 1″

Symbol

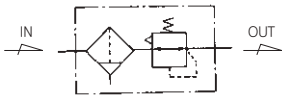

Filter Regulator

▣ Standard Specifications

Fluid		Air
Max. Operating Pressure (MPa)		1.0(140psi)
Proof Pressure (MPa)		1.5(200psi)
Set Pressure	Standard	0.05~1.0
Range(MPa)	Madd to Order Specifications	0.05~0.2(7~30psi), 0.05~0.47(7~60psi), 0.05~1.5(7~200psi)
Ambient and Fluid Temperature (℃)		−5~60(23~140°F) (Non−freezing)
Flow Capacity ※	3/4″	9,400(332scfm)
(Nℓ/min)	1″	9,900(350scfm)
Filtration (㎛)		5
Construction		Relieving Sytle
Bowl Material		Polycarbonate
Bowl Guard Material		Nylon
Drain Capacity (㎤)		Manual Drain : 156(5.27oz), Auto Drain : 174(5.88oz)
Weight (kg)		2.39(5.27lb)

※ Test conditions : Supply pressure 0.7MPa(100psi), pre−set pressure 0.6MPa(90psi)

▣ How to Order

PP 5 — ＊ 10 B D G — ＊

Series
(Piggyback Unit)

Thread

Blank	Rc(PT)
N	NPT
G	G(PF)

Port Size

06	3/4
10	1

Bracket Option

Blank	None
B	Bracket + Panel Nut
B1	Panel Nut

Note2)

Note2) Separately packed, Not assembled.

Other Option

Blank	Set at 0 to 1.0 MPa, 5㎛ (Standard)			
2	Set at 0 to 0.2 MPa	J4	Filter element − 40㎛	
4	Set at 0 to 0.4 MPa	K	Built−in Check Valve	Note1)
15	Set at 0 to 1.5 MPa	R	Flow direction : Right→Left	Note1,2)
E	Non−Relieving Type	T	Tamper Resistant Kit	
J2	Filter element − 20㎛	XC16	Copper−free	

Note1) Refer to page 935 for Built−in check valve, Tamper resistant kit.
＊If ordering more than one option, indicate symbols numerically then aiphabetically Ex) 2EK
＊Over Max. pressure value can be set.

Pressure Gauge

Symbol	Descripition	Pressure Range
Blank	None	
G	Integral Pressure Gauge (W/Limit Indicator)	1.0MPa
P	Pressure Gauge	1.0MPa
P2	Pressure Gauge	0.2MPa
P4	Pressure Gauge	0.4MPa

Drain Option

Blank	Manual Drain	
D	Auto Drain (N.O Type)	Note3)

Note3) Min. operating pressure is 0.15MPa(20psi) for Auto Drain (N.O Type)

▣ Construction

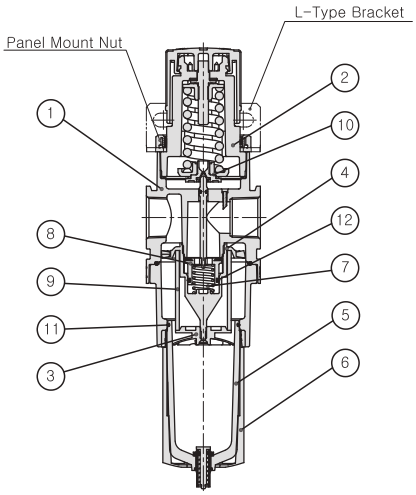

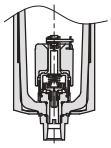

Auto-Drain Type

Main Parts/Parts List

NO.	Description	Material	Remark
①	Body	Aluminum	
②	Bonnet	Aluminum	
③	Baffle	Acetal	
④	Deflector	Nylon	
⑤	Bowl	Polycarbonate	
⑥	Bowl Guard	Nylon	
⑦	Valve Spring	Stainless Steel	

Replacement Parts/Parts List

NO.	Description	Material	Part No.
⑧	Valve Ass'y	Brass+NBR	PP5-08A001-01
⑨	Filter Element	Polyethylene	PF5-24-005-01
⑩	Diaphragm Ass'y	Aluminum+NBR	PR5-11A001-01
⑪	Bowl O-ring	NBR	TAF4000-08-6000
⑫	Valve O-ring	NBR	P21-01

▣ Dimensions

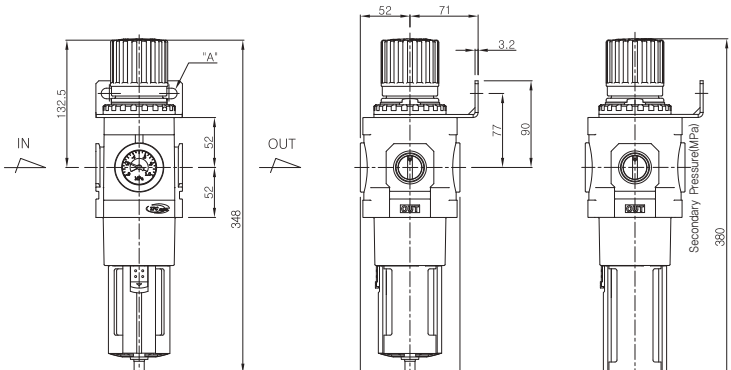

▣ Flow Characteristics

▶ 3/4″ PP5

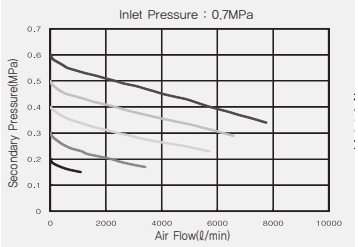

▶ 1″ PP5

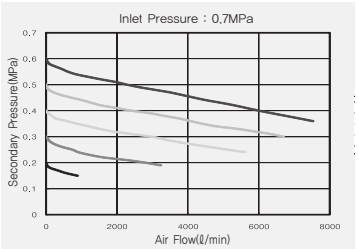

▣ Pressure Characteristics

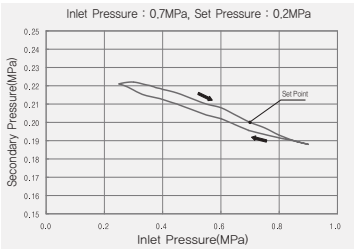

Series PC2~PC5

The Mounting Position of Bracket

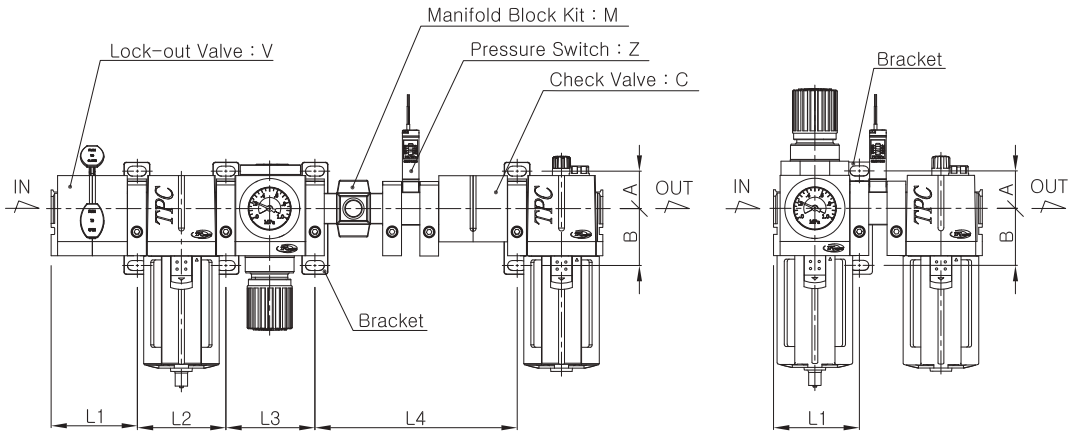

Attachment	C			M			V			Z			CM			CV				CZ			MV			
Type	L1	L2	L3	L1	L2	L3	L1	L2	L3	L1	L2	L3	L1	L2	L3	L1	L2	L3	L4	L1	L2	L3	L1	L2	L3	L4
PC2	40	40	40	40	40	40	40	40	40	40	40	12	40	40	80	40	40	40	40	40	40	52	40	40	40	40
PC3	56	56	56	56	56	49	56	56	56	56	56	13	56	56	105	56	56	56	56	56	56	69	56	56	56	49
PC4	72.7	72.7	74.4	72.7	75.4	65.4	72.7	75.4	75.4	72.7	75.4	31.4	72.7	75.4	139.8	72.7	75.4	75.4	74.4	72.7	75.4	105.8	72.7	75.4	75.4	65.4
PC5	–	–	–	–	–	–	92.7	95.4	95.4	92.7	95.4	36.4	–	–	–	–	–	–	–	–	–	–	–	–	–	–

Attachment	MZ			VZ				CMV				CMZ			CVZ				MVZ				CMVZ			
Type	L1	L2	L3	L1	L2	L3	L4	L1	L2	L3	L4	L1	L2	L3	L1	L2	L3	L4	L1	L2	L3	L4	L1	L2	L3	L4
PC2	40	40	52	40	40	40	12	40	40	40	80	40	40	92	40	40	40	52	40	40	40	52	40	40	40	92
PC3	56	56	62	56	56	56	13	56	56	56	105	56	56	118	56	56	56	69	56	56	56	69	56	56	56	118
PC4	72.7	75.4	96.8	72.7	75.4	75.4	31.4	72.7	75.4	75.4	139.8	72.7	75.4	171.2	72.7	75.4	75.4	105.8	72.7	75.4	75.4	96.8	72.7	75.4	75.4	171.2
PC5	–	–	–	92.7	95.4	95.4	36.4	–	–	–	–	–	–	–	–	–	–	–	–	–	–	–	–	–	–	–

Attachment	C		V		Z		CV			CZ		VZ		CVZ		
Type	L1	L2	L1	L2	L1	L1	L2	L3	L1	L2	L1	L2	L1	L2	L3
PC2A	40	40	40	40	40	40	40	40	40	52	40	40	40	40	52
PC3A	56	56	56	56	56	56	56	56	56	69	56	56	56	56	69
PC4A	72.7	74.4	72.7	75.4	72.7	72.7	75.4	74.4	72.7	105.8	72.7	75.4	72.7	75.4	105.8
PC5A	–	–	–	–	–	–	–	–	–	–	92.7	95.4	–	–	–

Attachment	M		V		Z		MV			MZ		VZ			MVZ		
Type	L1	L2	L3	L1	L2	L3	L1	L2	L3	L1	L2	L3	L1	L2	L3	L1	L2
PC2B	40	40	40	40	40	40	40	40	40	40	40	40	40	40	40	40	40
PC3B	56	56	56	56	56	49	56	56	56	56	56	56	56	56	56	56	56
PC4B	72.7	75.4	72.7	75.4	72.7	75.4	72.7	75.4	75.4	72.7	75.4	72.7	75.4	75.4	72.7	75.4	75.4
PC5B	–	–	92.7	95.4	92.7	95.4	–	–	–	–	–	92.7	95.4	95.4	–	–	–

L1 : Form inlet to the mounting hole of 1st bracket
L2 : Form the mounting hole of 1st bracket to 2nd bracket's
L3 : Form the mounting hole of 2nd bracket to 3rd bracket's
L4 : Form the mounting hole of 3rd bracket to 4th bracket's
For the size of A and B, please refer to the dimensions.

Series PFH(U)2~PFH(U)5

Coalescing Filter 1/8″,1/4″,3/8″,1/2″, 3/4″and 1″

▣ Standard Specifications

Description		PFH/PFU2	PFH/PFU3	PFH/PFU4	PFH/PFU5
Max. Operating Pressure (MPa)		1.0(140psi)			
Proof Pressure (MPa)		1.5(200psi)			
Ambient and Fluid Temperature (℃)		−5 ~ 60 (Non−freezing)			
Flow Capacity ※ (N ℓ /min)		1/8″, 1/4″: 200 (7scfm)	1/4″, 3/8″: 450 (16scfm)	3/8″, 1/2″: 1100 (39scfm)	3/4″, 1″: 1100 (39scfm)
Bowl Material		Polycarbonate			
Bowl Guard Material		Nylon			
Filtration (㎛)		PFH : 0.3, PFU : 0.01			
Drain Capacity (㎤)	Manual	15(0.51oz)	38(1.28oz)	56(1.89oz)	156(5.27oz)
	Auto	21(0.71oz)	30(1.01oz)	68(2.3oz)	174(5.88oz)
Weight (kg)		0.14(0.31oz)	0.24(0.53oz)	0.5(1.1oz)	1.1(2.43oz)

※ Test conditions : Supply pressure 0.6MPa(90psi), pressure drop 0.07MPa(10psi)

Symbol

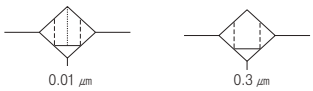

▣ How to Order

PFH 4 — ✻ 04 B D — ✻

Coalescing Filter

PFH	HEPA Filter (Filtration 0.3㎛)
PFU	Ultra Filter (Filtration 0.01㎛)

Series

2	PC2 Series	4	PC4 Series
3	PC3 Series	5	PC5 Series

Thread

Blank	Rc(PT)
N	NPT
G	G(PF)

Port Size

01	1/8	PC2 Series
02	1/4	PC2,3 Series
03	3/8	PC3,4 Series
04	1/2	PC4 Series
06	3/4	PC5 Series
10	1	PC5 Series

Other Option

Symbol	Descripition	Applicable Series
L	Life Indicator	PC4~5 Series
R	Flow direction : Right→Left	PC2~5 Series
XC16	Copper−free	PC2~5 Series

Drain Option

Symbol	Descripition	Applicable Series
Blank	Manual Drain	PC2~PC5
D	Auto Drain (N.O Type)	PC2~PC5
D2	Auto Drain (Piping Exhaust)	PC2
D5	Manual Drain (Piping Exhaust)	PC2

Note1)

Note1) Min. operating pressure is 0.15MPa(20psi) for Auto Drain (N.O Type)

Bracket Option

Blank	None
B	Bracket

Note2)

Note2) Separately packed, Not assembled.

▣ PFH2 Construction

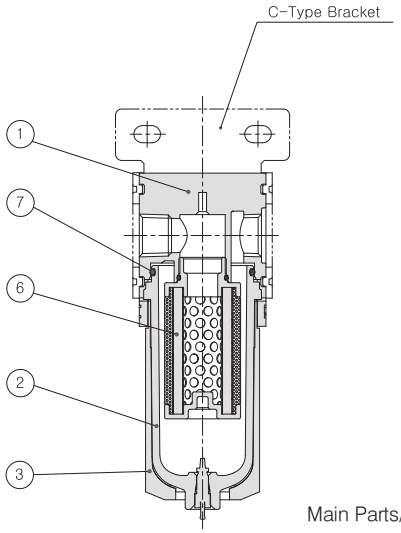

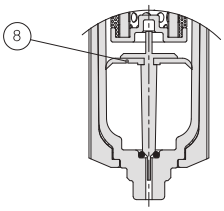

Auto-Drain Standard Type

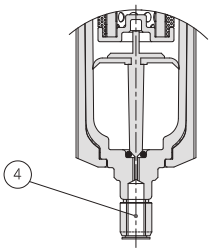

Auto-Drain Piping Type

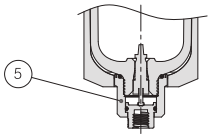

Manual-Drain Piping Type

Main Parts/Parts List

NO.	Description	Material	Remark
①	Body	Aluminum	
②	Bowl	Polycarbonate	
③	Bowl Guard	Nylon	
④	Fitting	–	
⑤	Manual Drain Piping Ass'y	–	

Replacement Parts/Parts List

NO.	Description	Material	Part No.
⑥	Coalescing Filter Element Ass'y	–	PFH2-24A030-01
⑦	Bowl O-ring	NBR	DX2R-53-3000
⑧	Auto Drain Ass'y	–	PF2-26A002-01

▣ PFH3 Construction

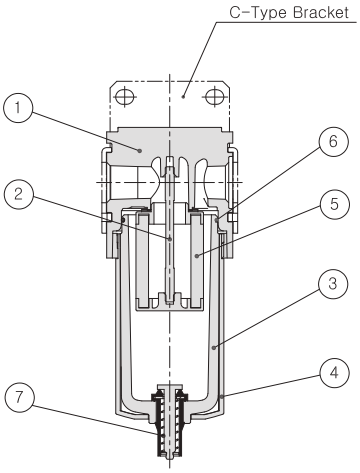

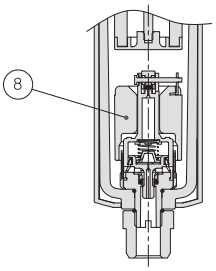

Auto-Drain Type

Main Parts/Parts List

NO.	Description	Material	Remark
①	Body	Aluminum	
②	Baffle Shaft	Rolled Steel	
③	Bowl	Polycarbonate	
④	Bowl Guard	Nylon	

Replacement Parts/Parts List

NO.	Description	Material	Part No.
⑤	Coalescing Filter Element Ass'y	–	PFH3000-005A-6081
⑥	Bowl O-ring	NBR	PL3-04-001-01
⑦	Drain Ass'y	–	TAF3000-10A-6004
⑧	Auto Drain Ass'y	–	TAF3000-04A-6008

▣ PFH4 Construction

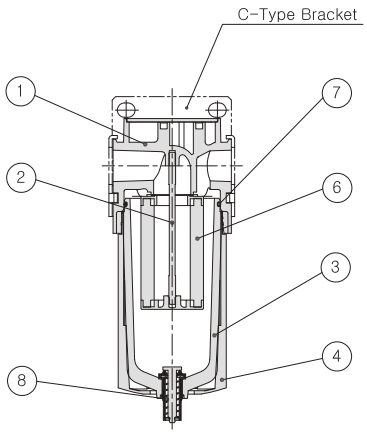

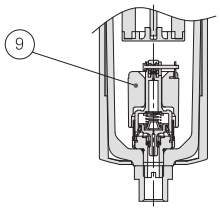

Auto-Drain Type

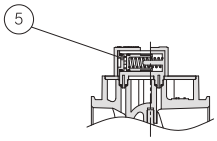

Life Indicator Type

Main Parts/Parts List

NO.	Description	Material	Remark
①	Body	Aluminum	
②	Baffle Shaft	Rolled Steel	
③	Bowl	Polycarbonate	
④	Bowl Guard	Nylon	
⑤	Life Indicator	–	Option

Replacement Parts/Parts List

NO.	Description	Material	Part No.
⑥	Coalescing Filter Element Ass'y	–	PFH4000-005A-6083
⑦	Bowl O-ring	NBR	TAF4000-08-6000
⑧	Drain Ass'y	–	TAF3000-10A-6004
⑨	Auto Drain Ass'y	–	TAF3000-04A-6008

▣ PFH5 Construction

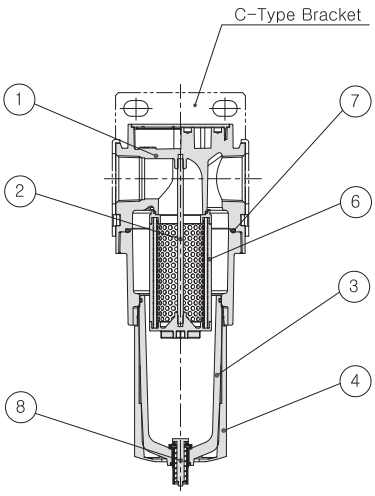

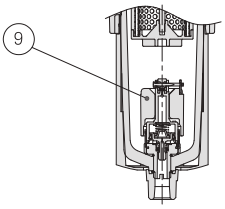

Auto-Drain Type

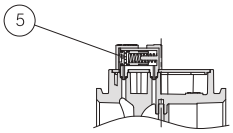

Main Parts/Parts List

NO.	Description	Material	Remark
①	Body	Aluminum	
②	Baffle Shaft	Rolled Steel	
③	Bowl	Polycarbonate	
④	Bowl Guard	Nylon	
⑤	Life Indicator	–	Option

Replacement Parts/Parts List

NO.	Description	Material	Part No.
⑥	Coalescing Filter Element Ass'y	–	PFH5-24A030-01
⑦	Bowl O-ring	NBR	TAF4000-08-6000
⑧	Drain Ass'y	–	TAF3000-10A-6004
⑨	Auto Drain Ass'y	–	TAF3000-04A-6008

▣ Construction of Coalescing Filter Element

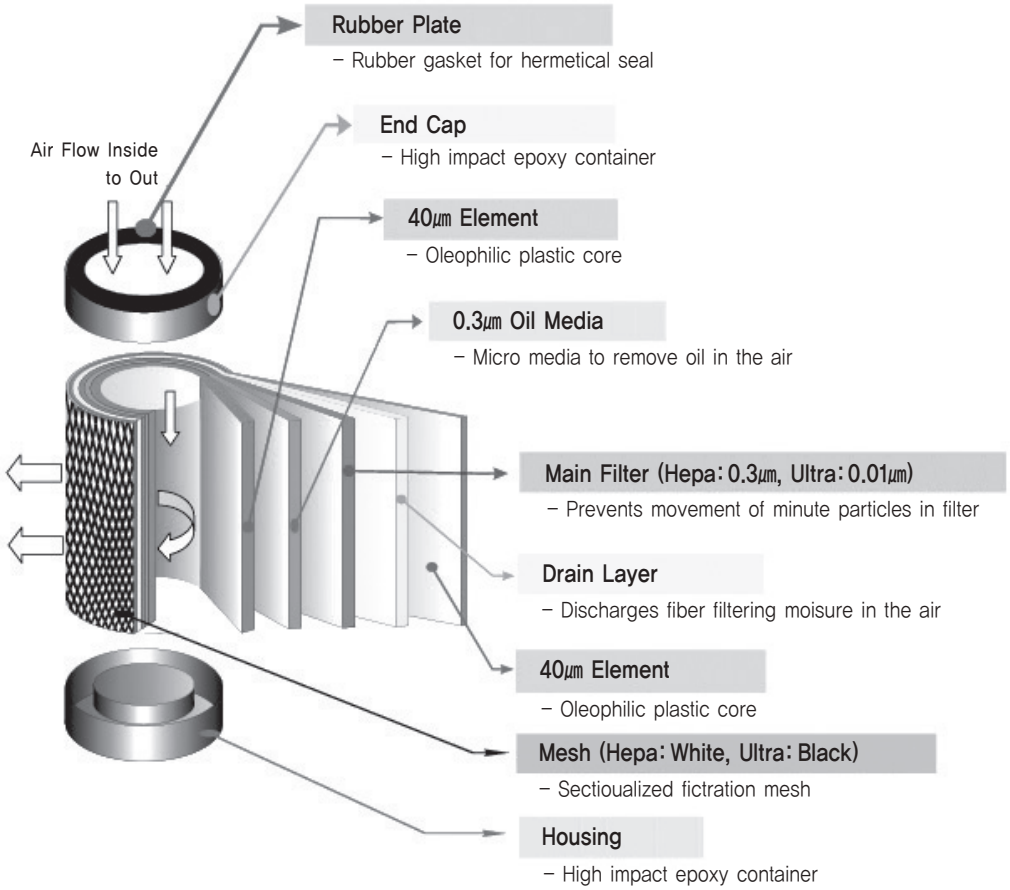

Media Characteristics

NO	Grade	D.O.P Efficiency 0.3 to 0.6㎛	Oil Content	Color
1	0.01 ㎛	99.99%	0.01ppm	White
2	0.3 ㎛	99.97%	0.05ppm	Black

▣ Flow Characteristics

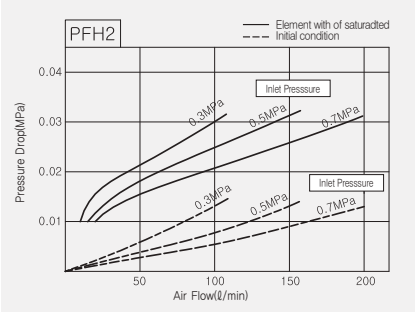

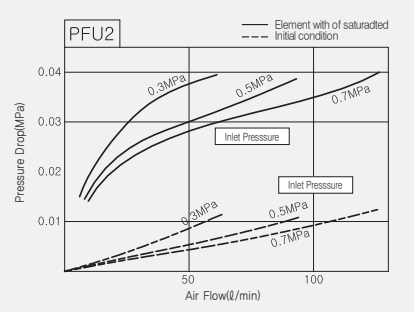

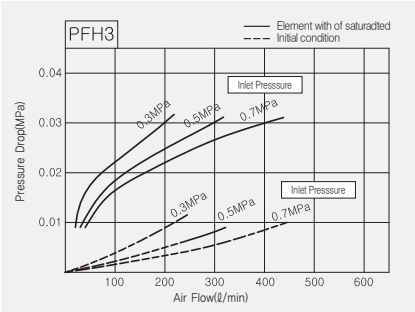

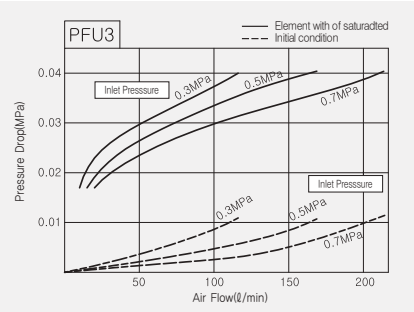

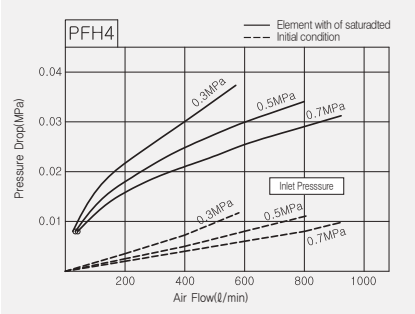

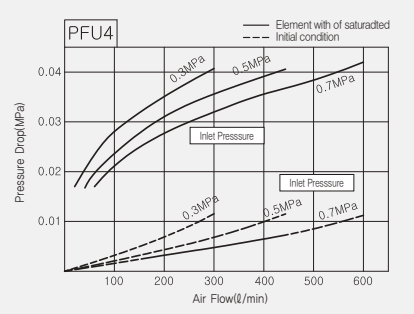

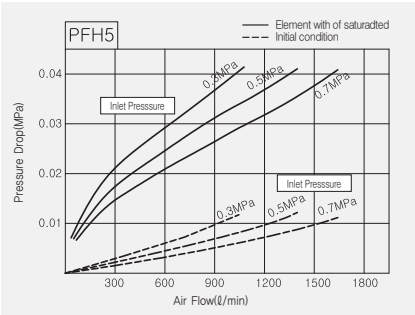

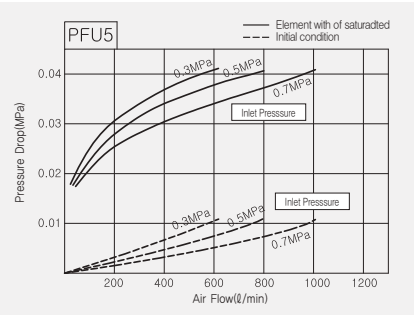

Series PPH(U)3, PPH(U)4

Piggyback Coalescing Filter 1/4″, 3/8″and 1/2″

PAT

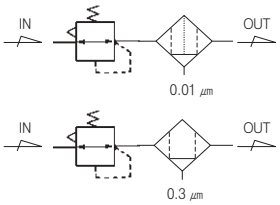

▣ Standard Specifications

Series		PPH/PPU3	PPH/PPU4
Max. Operating Pressure (MPa)		1(140psi)	
Proof Pressure (MPa)		1.5(200psi)	
Set Pressure Range(MPa)	Standard	0.05 ~ 1.0(7~140psi)	
	Madd to Order Specifications	0.05~1.2(7~170psi)	0.05~1.5(7~200psi)
Ambient and Fluid Temperature (℃)		−5 ~ 60(7~140psi) (Non−freezing)	
Flow Capacity (N ℓ /min) ※		1/4″ and 3/8″ − 300(11scfm)	3/8″ and 1/2″ − 800(28scfm)
Filtration (㎛)		PPH : 0.3, PPU : 0.01	
Construction		Relieving Style	
Bowl Material		Polycarbonate	
Bowl Guard Material		Nylon	
Drain Capacity (㎤)	Manual	38(1.28oz)	56(1.89oz)
	Auto	30(1.01oz)	68(2.3oz)
Weight (kg)		0.49(1.08oz)	0.74(1.63oz)

※ Test conditions : Supply pressure 0.7MPa(100psi), pre−set pressure 0.6MPa(90psi)

▣ How to Order

PPH 4 — ＊ 04 B D G — ＊

Piggyback Coalescing Filter

PPH	HEPA Filter (Filtration 0.3㎛)
PPU	Ultra Filter (Filtration 0.01㎛)

Series

3	PC3 Series
4	PC4 Series

Thread

Blank	Rc(PT)
N	NPT
G	G(PF)

Port Size

02	1/4	PC3 Series
03	3/8	PC3, 4 Series
04	1/2	PC4 Series

Bracket Option

Blank	None	
B	Bracket + Panel Nut	Note2)
B1	Panel Nut	

Note2) Separately packed, Not assembled.

Drain Option

Blank	Manual Push Drain	
D	Auto Drain (N.O Type)	Note3)

Note3) Min. operating pressure is 0.15MPa(20psi) for Auto Drain (N.O Type)

Pressure Gauge

Sysmbol	Description	Pressure Range
Blank	None	
G	Integral Pressure Guage (W/Limit Indicator)	1.0MPa
P	Pressure Range	1.0MPa
P2	Pressure Range	0.2MPa
P4	Pressure Range	0.4MPa

Other Option

Blank	Set at 0 to 1.0 MPa	
12	Set at 0 to 1.2 MPa (PC3 Series)	
15	Set at 0 to 1.5 MPa (PC4 Series)	
E	Non−Relieving Type	
R	Flow direction : Right→Left	
T	Tamper Resistant Kit	Note1,2)
XC16	Copper−free	

Note1) Refer to page 935 for Tamper Resistant Kit.
＊If ordering more than one option, indicate symbols numerically then aiphabetically Ex) 12RT
＊Over Max. pressure value can be set.

TPC MOTION

▣ PPH3/PPU3 Construction

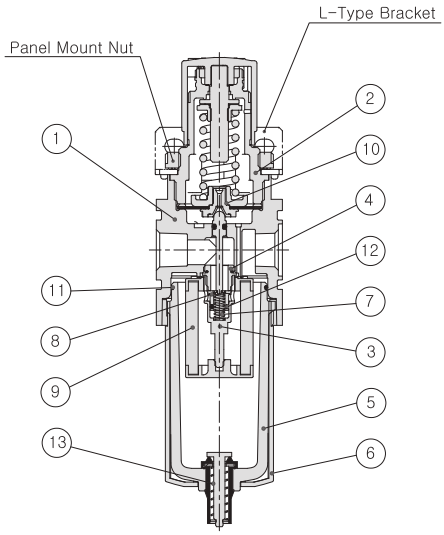

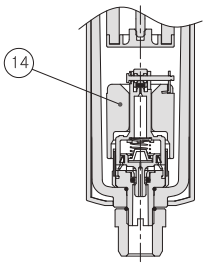

Auto-Drain Type

Main Parts/Parts List

NO.	Description	Material	Remark
①	Body	Aluminum	
②	Bonnet	Nylon	
③	Valve Guide	Aluminum	
④	Insert	Aluminum	
⑤	Bowl	Polycarbonate	
⑥	Bowl Guard	Nylon	
⑦	Valve Spring	Stainless Steel	

Replacement Parts/Parts List

NO.	Description	Material	Part No.
⑧	Valve ass'y	Brass+NBR	PPH3-08A001-01
⑨	Coalescing Filter Ass'y	-	PFH3000-005A-6081
⑩	Diaphragm Ass'y	Nylon+NBR	PR3-11A001-01
⑪	Bowl O-ring	NBR	PL3-04-001-01
⑫	Valve O-ring	NBR	S6-01
⑬	Drain Ass'y	-	TAF3000-10A-6004
⑭	Auto-Drain Ass'y	-	TAF3000-01A-6008

▣ PPH3/PPU3 Dimensions

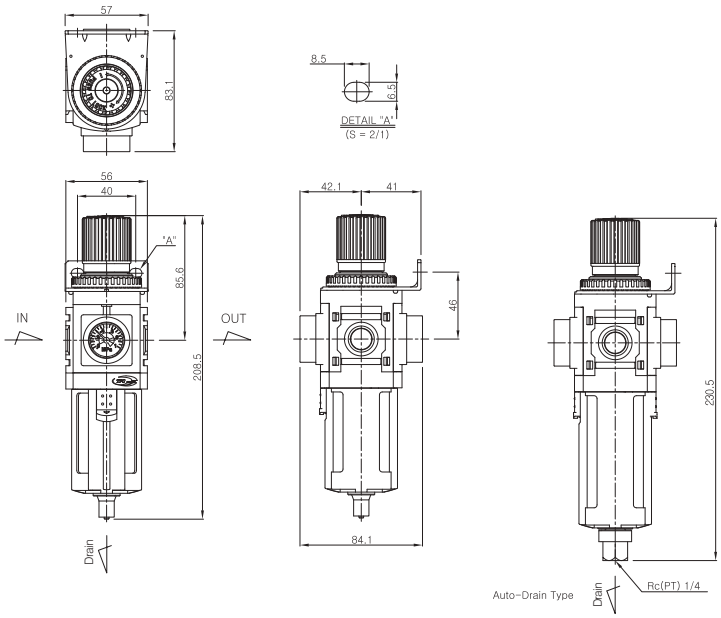

▣ PPH4/PPU4 Construction

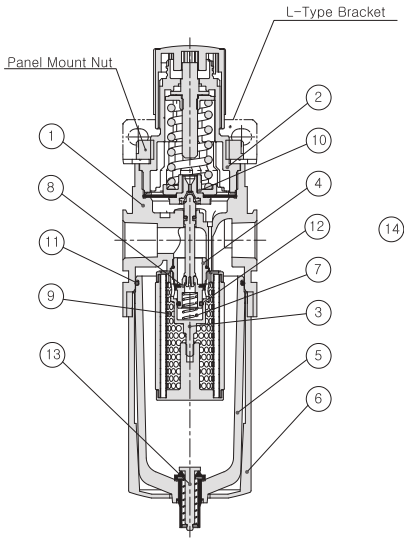

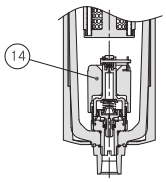

Auto-Drain Type

Main Parts/Parts List

NO.	Description	Material	Remark
①	Body	Aluminum	
②	Bonnet	Nylon	
③	Valve Guide	Aluminum	
④	Insert	Aluminum	
⑤	Bowl	Polycarbonate	
⑥	Bowl Guard	Nylon	
⑦	Valve Spring	Stainless Steel	

Replacement Parts/Parts List

NO.	Description	Material	Part No.
⑧	Valve Ass'y	Nylon+NBR	PP3-08A001-01
⑨	Coalescing Filter Ass'y	-	PPH4-24A030-01
⑩	Diaphragm Ass'y	Nylon+NBR	PR4-11A001-01
⑪	Bowl O-ring	NBR	TAF4000-08-6000
⑫	Valve O-ring	NBR	P10-01
⑬	Drain Ass'y	-	TAF3000-10A-6004
⑭	Auto-Drain Ass'y	-	TAF3000-01A-6008

▣ PPH4/PPU4 Dimensions

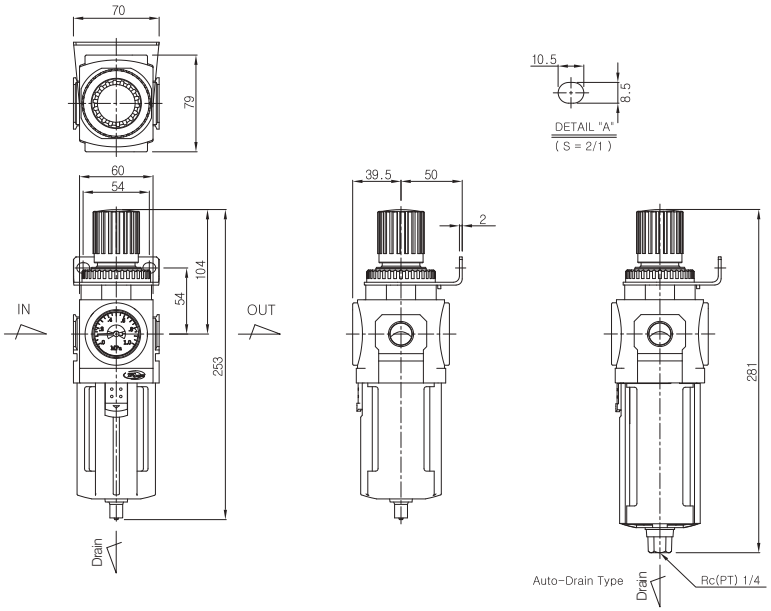

▣ Flow Characteristics

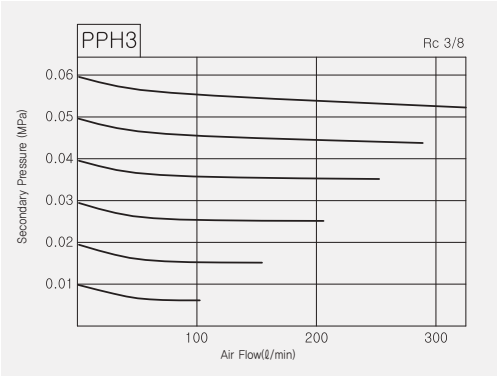

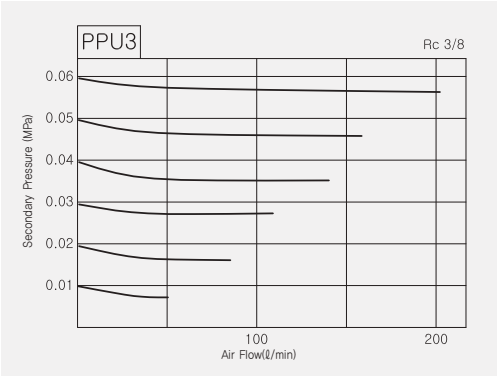

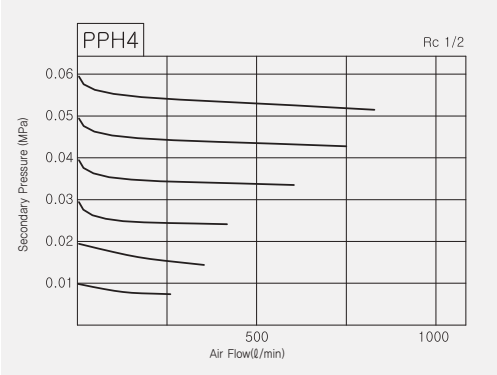

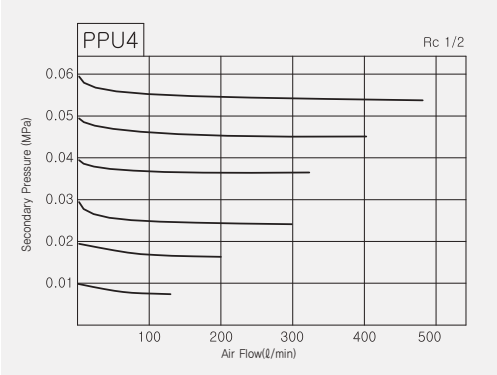

Series PLV

Accessories Modular Lock Out Valve

This valve provides a safety lockout to prevent accidental machine start-up.
When the slider is shifted into the lockout position, inlet air is blocked and downstream air is exhausted to the atmosphere.

▫ PLV2

▫ PLV3

▣ Standard Specifications

Specifications	PLV2	PLV3	PLV4	PLV5
Port Size Rc(PT), NPT, G(PF)	1/8˝ , 1/4˝	1/4˝ , 3/8˝	3/8˝ , 1/2˝	3/4˝ , 1˝
Type of Exhaust	Silencer Exhaust			
Proof Pressure (MPa)	1.5(200psi)			
Max. Operating Pressure (MPa)	1.0(140psi)			
Regulating Range (MPa)	0.05~1.0(7~140psi)			
Ambient and Media Temperature (℃)	-5~60(23~140°F)(Non-freezing)			
Weight (kg)	0.1(0.22lb)	0.24(0.53lb)	0.38(0.84lb)	0.88(1.94lb)

▫ PLV4

▫ PLV5

▣ How to Order

PLV 4 — * 04 — *

Series
(Lock-out V/V)

Type of Series

2	PC2 Series	4	PC4 Series
3	PC3 Series	5	PC5 Series

Thread

Blank	Rc(PT)
N	NPT
G	G(PF)

Option

Blank	None	
B	Clamp spacer kit	Note1)

Note1) Separately packed,
Not assembled.

Port Size

01	1/8	PC2 Series
02	1/4	PC2, 3 Series
03	3/8	PC3, 4 Series
04	1/2	PC4 Series
06	3/4	PC5 Series
10	1	PC5 Series

▣ PLV2 Dimensions

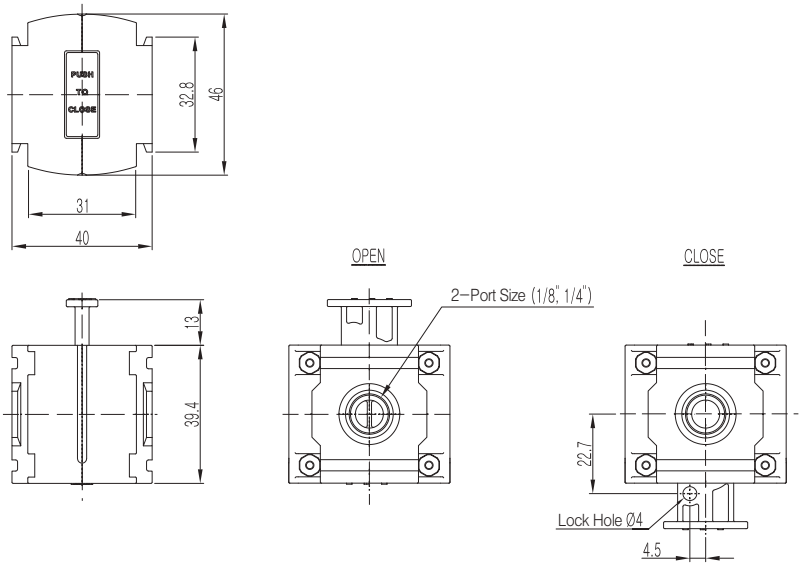

▣ PLV3, 4, 5 Dimensions

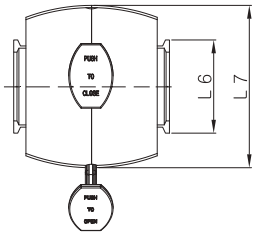

Series	Main Dimensions									Remarks
	Port Size Rc(PT), NPT, G(PF)	L 1	L 2	L 3	L 4	L 5	L 6	L 7	D	
PLV3	1/4, 3/8	46	56	49	56	70.2	33	56	7.5	
PLV4	3/8, 1/2	59	70	68	73	100	41.9	71	10	
PLV5	3/4, 1	74	89	90	98	131.9	49.6	98	10	

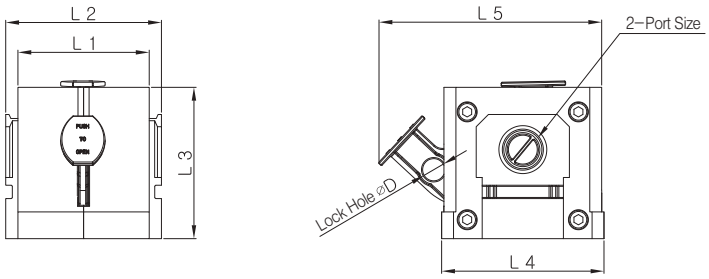

Series PSH

Accessories Modular Shut-off Valve

- Modular type, easy combination with F.R.L units
- Prevents a mistakes by lock function in exhaust
- Improved exhausting time

□ PSH2

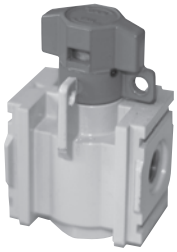

□ PSH3

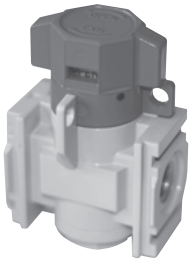

Symbol

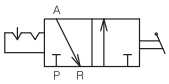

▣ Standard Specifications

Type	PSH2		PSH3		PSH4		PSH5	
Tube Port Size Rc(PT), NPT, G(PF)	1/8″	1/4″	1/4″	3/8″	3/8″	1/2″	3/4″	1″
Exhaust Port Size Rc(PT), NPT, G(PF)	1/8″		1/4″		3/8″		1/2″	
Supply Effective Area (㎟)	12	14	30	57	63	106	267	370
Exhaust Effective Area (㎟)	11	16	16	30	32	51	98	120
Proof Pressure (MPa)	1.5							
Max. Operating Pressure (MPa)	1.0							
Ambient Temperature (℃)	−5 ~ 60 (Non−Freezing)							
Angle of Knob Operation	90°							
Weight (g)	324		312		406		990	

□ PSH4

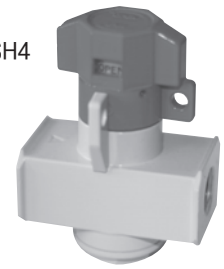

□ PSH5

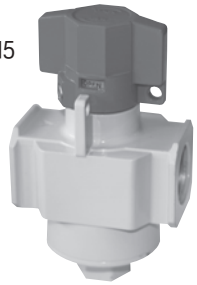

▣ How to Order

PSH 4 — * 04 — *

Series
(Shut-out V/V)

Type of Series

2	PC2 Series	4	PC4 Series
3	PC3 Series	5	PC5 Series

Thread

Blank	Rc(PT)
N	NPT
G	G(PF)

Port Size

01	1/8	PC2 Series
02	1/4	PC2, 3 Series
03	3/8	PC3, 4 Series
04	1/2	PC4 Series
06	3/4	PC5 Series
10	1	PC5 Series

Option

Blank	None	
B	Clamp spacer kit	Note)

Note) Separately packed, Not assembled

▣ Construction

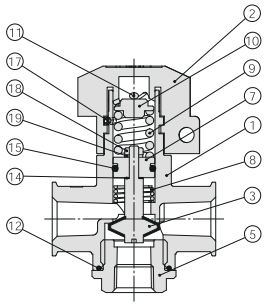

PSH 2, 3, 4 Series

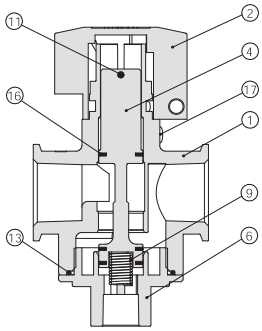

PSH 5 Series

Main Parts List

NO.	Description	Material	Note
①	Body	Zinc	PSH2
		Aluminum	PSH3,4,5
②	Handle	Zinc	
③	Poppet Valve	Brass+NBR	
④	Spool	Aluminum	
⑤	Poppet Valve Guide	Zinc	
⑥	Spool Guide	Zinc	
⑦	Piston	Brass	
⑧	Poppet Valve Spring	Stainless Steel	
⑨	Spring	Piano Wire	
⑩	Spring Holder	Free Cutting Steel	
⑪	Parallel Pin	Free Cutting Steel	
⑫	Poppet Valve Guide Gasket	NBR	
⑬	Spool Guide Gasket	NBR	
⑭	Washer	NBR	
⑮	Piston Packing	NBR	
⑯	Spool Packing	NBR	
⑰	Handel Stopping Screw	Carbon Steel	
⑱	Poppet Valve Nut	Carbon Steel	
⑲	Poppet Valve Washer	Stainless Steel	

▣ Combination

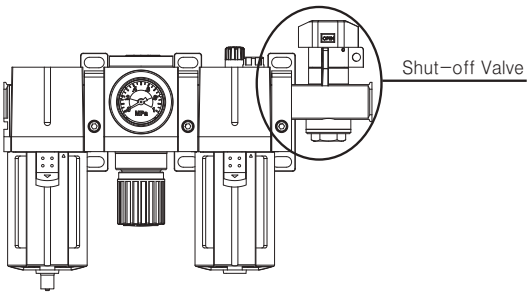

※ A Shut-off Valve has to be connected to the outlet side of FRL units.

▣ Cautions

① "P" of "▷" mark which refers to input of compressed air is a inlet, and A port of oppsite side is outlet.

② Do not add pressure except P port, It causes a malfunction, R port which is right-angled direction is a outlet port, Please connect them with caution. It causes a malfunction.

③ A malfuntion and air leak might be caused unless a handle will be stopped halfway, so conversion has to be done immediately. Please change the handle surely.

④ Do not remove attached screw on the handle. It causes a malfuntion by omission off the screw.

▣ PSH2 Dimensions

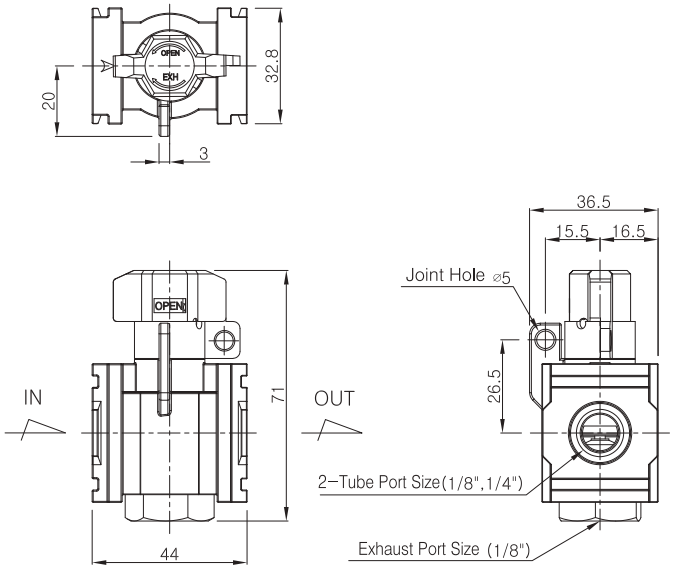

▣ PSH3 Dimensions

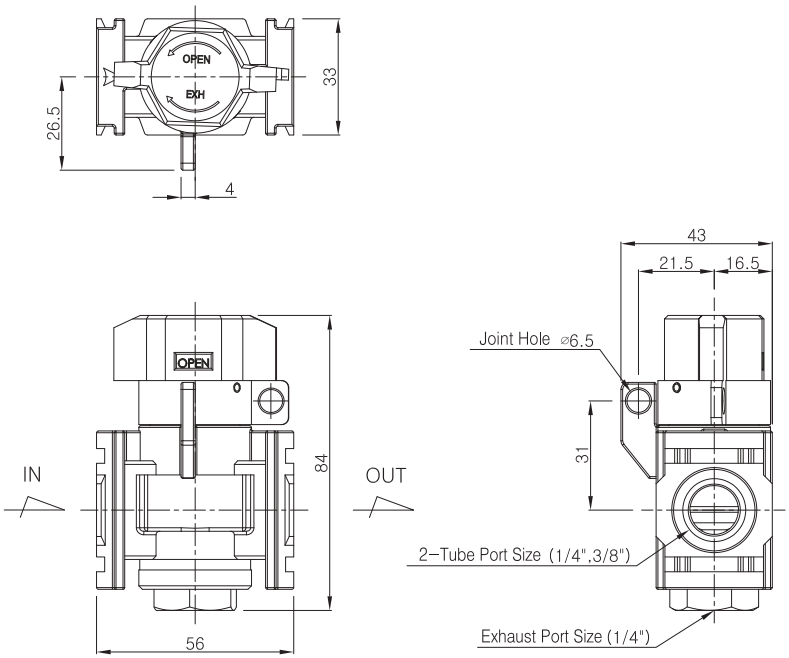

▣ PSH4 Dimensions

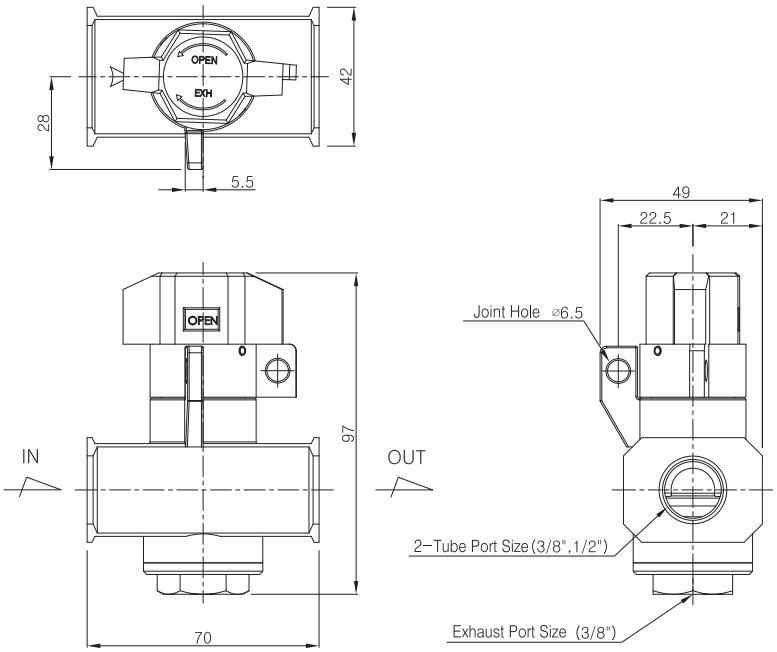

▣ PSH5 Dimensions

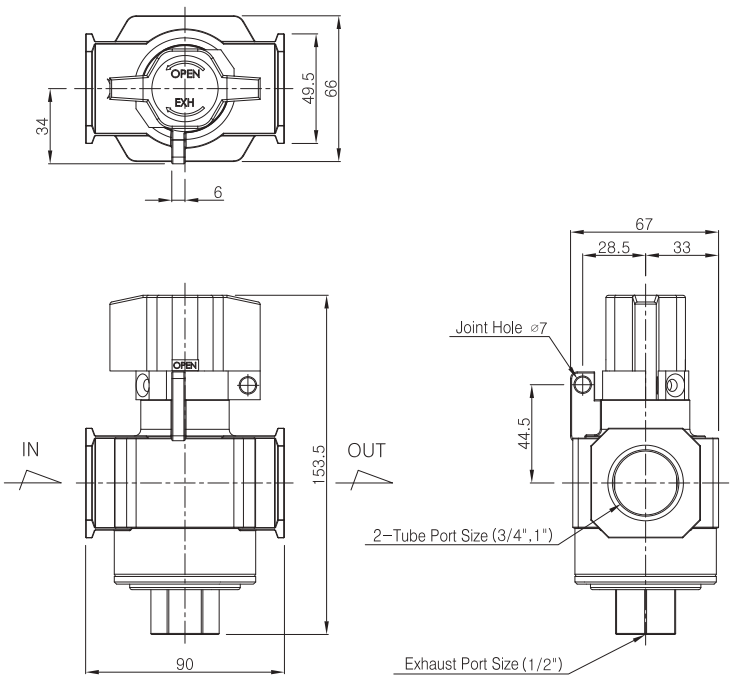

Series PCV

Accessories Modular Check Valve

The modular check valve is used to prevent downstream pressure loss.
Acting as a one-way directional flow valve, this device is generally installed downstream of the regulator.

▫ PCV2

▣ Standard Specifications

Specifications	PCV2	PCV3	PCV4
Port Size (No Threads)	1/4˝ Hole	3/8˝ Hole	1/2˝ Hole
Top Port Size Rc(PT), NPT, G(PF)	1/8˝, 1/4˝	1/8˝, 1/4˝	1/4˝, 3/8˝
Max. Flow Capacity (Nℓ/min)	1,200(42scfm)	3,500(124scfm)	5,000(177scfm)
Weight(kg)	0.01(0.02lb)	0.23(0.51lb)	0.43(0.95lb)

▫ PCV3

▫ PCV4

▣ How to Order

PCV 4 — 04 — * 03 B

Series
(Check V/V)

Type of Series

2	PC2 Series
3	PC3 Series
4	PC4 Series

Port Size

02	1/4	PC2 Series
03	3/8	PC3 Series
04	1/2	PC4 Series

Thread

Blank	Rc(PT)
N	NPT
G	G(PF)

Option

Blank	None	
B	Clamp spacer kit	Note1)
R	Flow Direction : Right → Left	

Note1) Separately packed, Not assembled.

Top Port Size

01	1/8	PC2, 3 Series
02	1/4	PC2, 3, 4 Series
03	3/8	PC4 Series

▣ PCV2 Construction

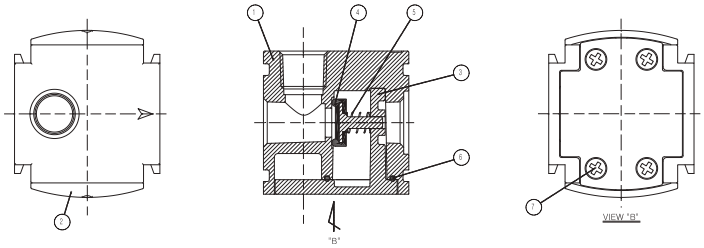

Main Parts List

NO.	Description	Material	Remark
①	Body	Aluminum	
②	F-Body Cover	Nylon	
③	Body Cover	Aluminum	
④	Valve Assembly	Brass+NBR	
⑤	Spring	Stainless Steel	
⑥	Gasket of Body Cover	NBR	
⑦	Bolt of Cover	Rolled Steel	

▣ PCV3, 4 Construction

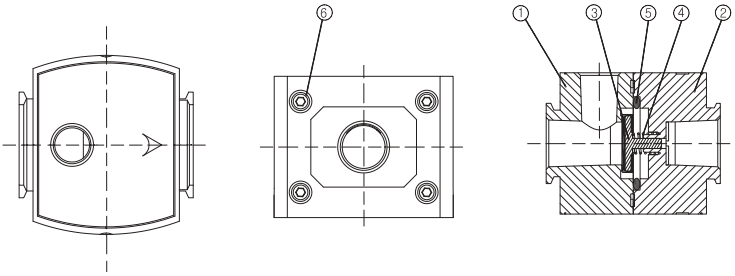

Main Parts List

NO.	Description	Material	Remark
①	Body R	Aluminum	
②	Body L	Aluminum	
③	Valve Assembly	Brass+NBR	
④	Return Spring	Stainless Steel	
⑤	Gasket	NBR	
⑥	Wrench Bolt	Rolled Steel	

▣ PCV2 Dimensions

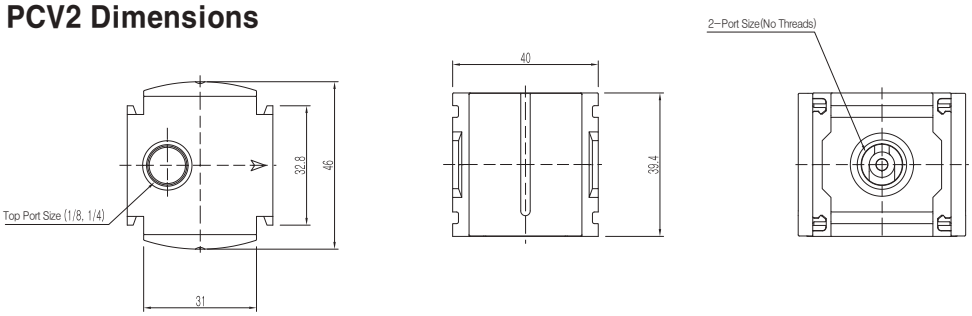

▣ PCV3, 4 Dimensions

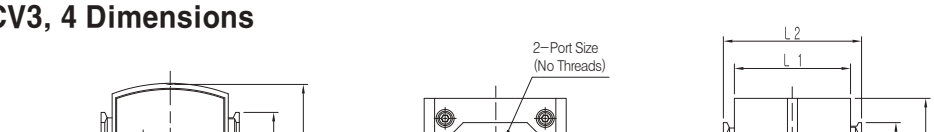

Series	Main Dimensions								Remarks
	Port Size (No Threads)	Top Port Size Rc(PT),NPT,G(PF)	L 1	L 2	L 3	L 4	L 5	L 6	
PCV3	3/8"	1/8" 1/4"	46	56	45	49	33	56	
PCV4	1/2"	1/4",3/8	58	69	31.8	56	41.9	71	

Series MB

Modular Manifold Block

▫ MB2

▣ Standard Specifications

Specifications	MB2	MB3	MB4
Port Size (No Threads)	1/4″	1/4″ , 3/8″	3/8″ , 1/2″
Top Port Size Rc(PT), NPT, G(PF)	1/8″ , 1/4″	1/8″ , 1/4″	1/4″ , 3/8″
Weight(kg)	0.09(0.2lb)	0.14(0.31lb)	0.17(0.37lb)

▫ MB3

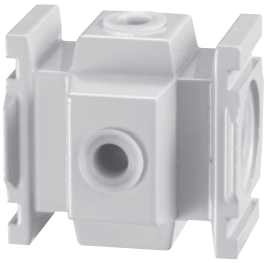

▫ MB4

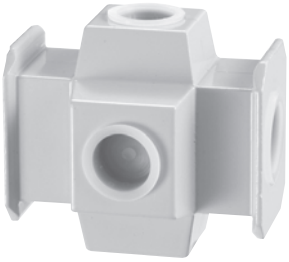

▣ How to Order

MB 3 — * 02 — 01

Series
(Manifold Block)

Type of Series

2	PC2 Series
3	PC3 Series
4	PC4 Series

Thread

Blank	Rc(PT)
N	NPT
G	G(PF)

Port Size

02	1/4	PC2, 3 Series
03	3/8	PC3, 4 Series
04	1/2	PC4 Series

Top Port Size

01	1/8	PC2, 3 Series
02	1/4	PC2, 3, 4 Series
03	3/8	PC4 Series

▣ MB2 Dimensions

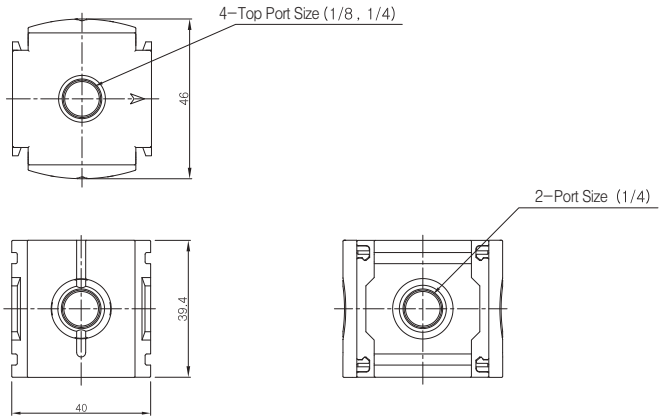

▣ MB3 Dimensions

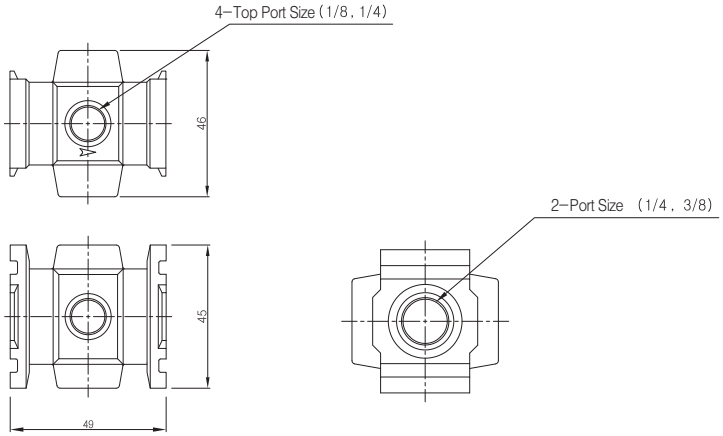

▣ MB4 Dimensions

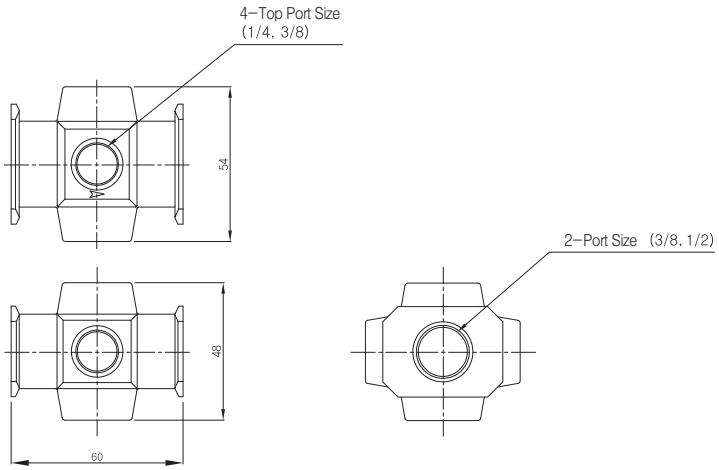

Series PA

Modular Pipe Adapter

□ PA2

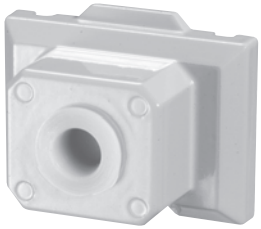

▣ Standard Specifications

Specifications	PA2	PA3	PA4	PA5
Port Size Rc(PT), NPT, G(PF)	1/8˝ , 1/4˝ 3/8˝	1/4˝ , 3/8˝ 1/2˝	3/8˝ , 1/2˝ 3/4˝	3/4˝ , 1˝
Weight (kg)	0.03(0.07lb)	0.04(0.09lb)	0.07(0.15lb)	0.13(0.29lb)

□ PA3

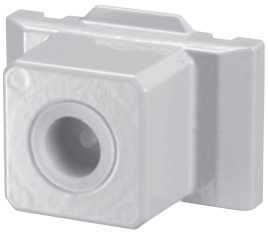

□ PA4

□ PA5

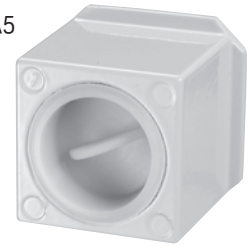

▣ How to Order

PA 3 — * 02 — R

Series
(Pipe Adapter)

Type of Series

2	PC2 Series
3	PC3 Series
4	PC4 Series
5	PC5 Series

Thread

Blank	Rc(PT)
N	NPT
G	G(PF)

Port Size

01	1/8	PC2 Series
02	1/4	PC2, 3 Series
03	3/8	PC2, 3, 4 Series
04	1/2	PC3, 4 Series
06	3/4	PC4, 5 Series
10	1	PC5 Series

Option

Blank	For Left Side	PC2, 3, 4, 5 Series
R	For Right Side	PC2, 3 Series

*PC4 & PC5 : Compatible with both right and left side.

▣ PA2, 3 Dimensions

(For Left Side)

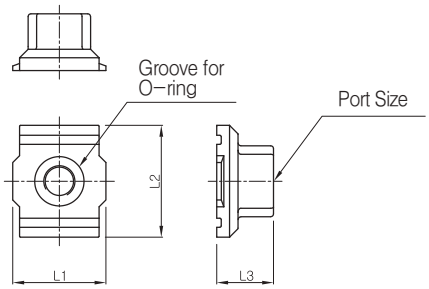

(For Right Side)

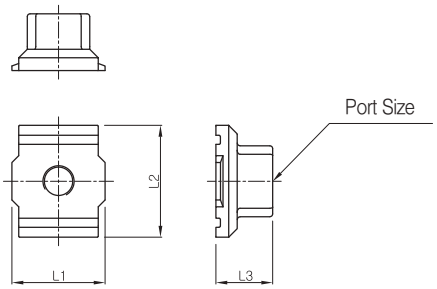

Series	Main Dimensions			
	Port Size Rc(PT),NPT,G(PF)	L1	L2	L3
PA2	1/8, 1/4, 3/8	32.8	39.4	20
PA3	1/4, 3/8, 1/2	33	45	25

▣ PA4, 5 Dimensions

(PA4)

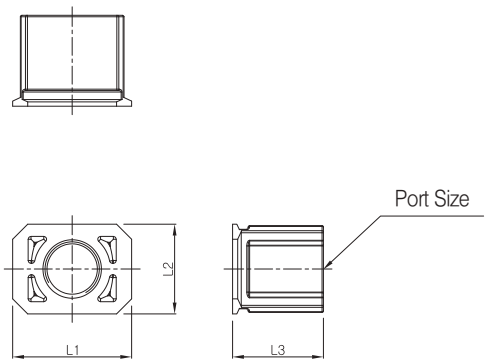

(PA5)

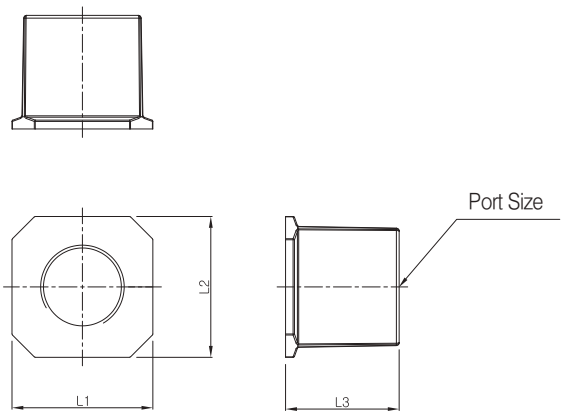

Series	Main Dimensions			
	Port Size Rc(PT),NPT,G(PF)	L1	L2	L3
PA4	3/8, 1/2, 3/4	41.9	31.6	32
PA5	3/4, 1	49.6	49.6	40

Series SSV

Slow-Start Valve

<Grommet Type> <DIN Type>

▣ Standard Specifications

Fluid	Air	
Operating Pressure Range	0.3~10MPa(44~140psi) (3~10 kgf/cm^2)	
Port Size for Gauge(Rc(PT),NPT,G(PF))	1/2″	
Max. Fluid and Ambient Temperature	Max. 50℃(122°F)	
Allowable Voltage	−15 ~ +10 % of Rated Voltage	
Max. Operating Frequency	2 Positions	5 c/s
	3 Positions	3 c/s
Min. Operating Frequency	1 Time per 30 Days (Based on KS B6356)	
Lubrication	Non Lube	
Impact/Vibration Resistance	30G / 5G (8.3~200 Hz)	
Protection Structure	Dust Proof	
Attached	Free	
Manual Operation	Non-locking, Lock	
Lead Wire	Grommet, Din Terminal	
Voltage	24V DC, 12V DC	
Effective Cross Section (Cv)	Over 63 mm^2 (3.5) (0.098 in^2)	
Power Consumption (AC)	Inrush	5.6 VA(50 Hz), 5.0 VA(60 Hz)
	Holding	3.3 VA(50 Hz), 2.3 VA(60 Hz)
Power Consumption (DC)	1.8W / 2W(Lamp)	

▣ How to Order

SSV 4 — 5 DZ * — * 04 *

Series (Slow-Start Valve)

PC4 Series

Voltage

1	AC110V (50/60Hz)
2	AC220V (50/60Hz)
3	AC120V (50/60Hz)
4	AC240V (50/60Hz)
5	DC24V
6	DC12V
7	DC6V
8	AC24V (50/60Hz)
9	DC100V

Electrical Entry

G	Grommet Type	Note1)
DZ	Din Type Connector Attached (with indicator light/surge voltage suppressor)	
N	Din Connector Type (No connector included)	

Note1) The grommet has direct coupling type lead wire, but without indicator light.

Manual Override

Blank	Non-Locking Push Type
C	Locking(Rotation Type)

Threads

Blank	Rc (PT)
N	NPT
G	G (PF)

Port Size

04	1/2

Pressure Gauge

Blank	None
P	With Pressure Gauge

▣ Construction

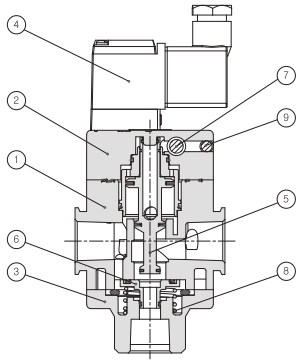

Main Parts List

NO.	Description	Material	Remark
①	Body	Aluminum	
②	T-Cover	Aluminum	
③	B-Cover	Aluminum	
④	Pilot Ass'y	–	
⑤	Piston	Aluminum	
⑥	Poppet	Brass	
⑦	Needle	Brass	
⑧	Poppet Spring	Stainless Steel	
⑨	Steel Ball	Stainless Steel	

▣ Dimensions

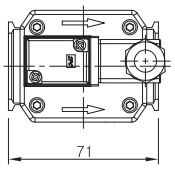

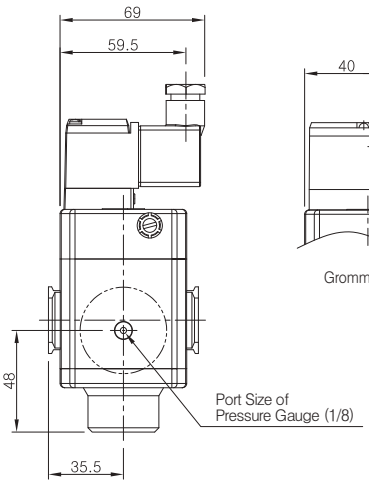

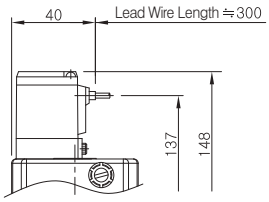

Grommet Type

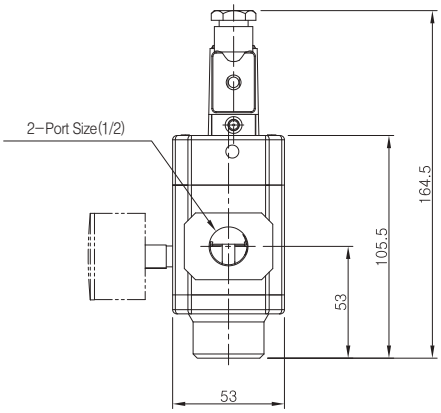

▣ Flow Characteristics

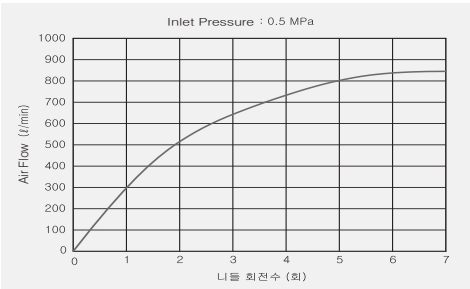

Series SMS1000

Pressure Switch

• Compact and unified pressure switch.

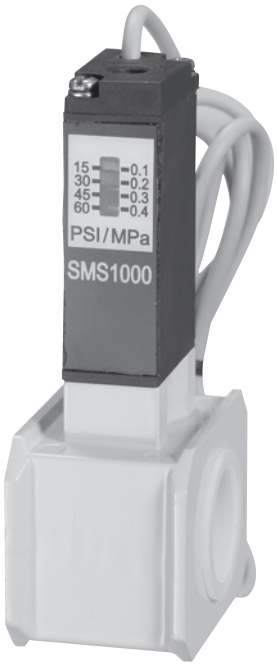

▣ Standard Specifications

Fluid	Air
Ambient and Fluid Temperature (℃)	−5~60(23~140°F)(Non−Freezing)
Operating Pressure Range (MPa)	0.1~0.4(15~60psi)
Proof Pressure (MPa)	1.0(140psi)
Max. Pressure (MPa)	0.7(100psi)
Hysteresis (MPa)	0.16(24psi)
Scale Variation (MPa)	±0.05(7psi)
Repeatability (MPa)	±0.05(7psi)
Contact	1a
Lead Wire Length	1m(39.7in)Standard(Gromment Type)
Port Size (R(PT), NPT)	1/8″
Weight (kg)	0.042(0.09lb)

▣ Auto-Switch Specification

Applied Model	W8H	
Voltage	DC24V	AC110V
Electric Current	5~40mA	5~20mA

▣ How to Order

SMS 1000 — R1 — 1 L

Series
(Pressure Switch)

Type of Port

R1	R(PT) 1/8 Bracket
N1	NPT 1/8 Bracket
S2	PC2 Series Adapter
S3	PC3 Series Adapter
S4	PC4 Series Adapter
S5	PC5 Series Adapter

Voltage

1	AC110V
5	DC24V

Lead Wire Length

Blank	1m(39.37in)(Standard)
L	3m(118.11in)
Z	5m(195.82in)

▣ Construction

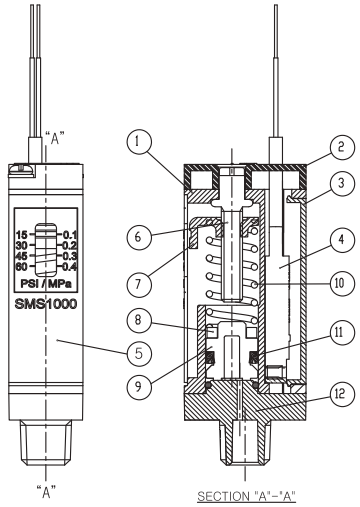

Main Parts List

NO.	Description	Material	Remark
①	Body	Nylon	
②	Top Cover	Resin	
③	Body Back Cover	Resin	
④	Auto Switch Ass'y	–	
⑤	Name Plate	ResinAluminum	
⑥	Adjustment Screw	Rolled Steel	
⑦	Pointer	Rolled Steel	
⑧	Magnet	Rare Earth Magnet	
⑨	Piston	Polyacetal	
⑩	Spring	SUS304	
⑪	Miniseal Y Type	NBR	
⑫	PT Fittings	Zinc Die Cast	

▣ Dimensions

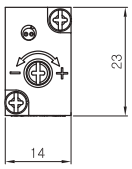

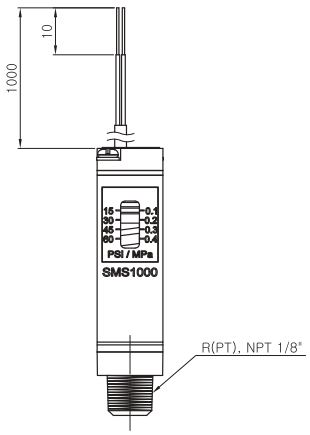

Bracket Type

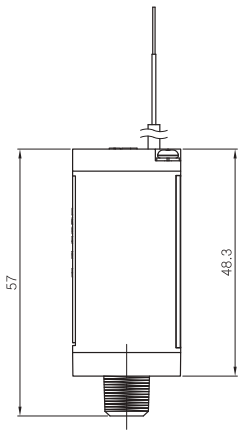

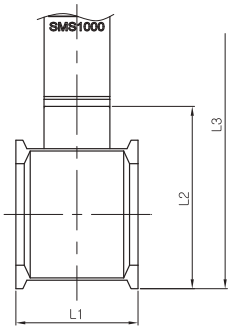

Adapter Type

Series	Dimension of Main Parts			Remarks
	L1	L2	L3	
PC2 Series	14	44.5	88	
PC3 Series	13	51	94.5	
PC4 Series	26	39	82	
PC5 Series	31	57.5	101	

Accessories

Modular Clamp Spacer kit

▫ PC2

▫ PC3

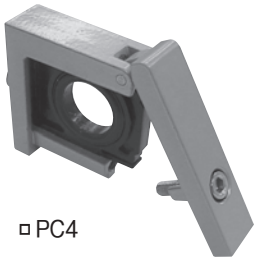

▫ PC4

▫ PC5

▣ Standard Specifications

Specifications	PC2	PC3	PC4	PC5
Item Number	PC2A-33A002	PC3A-33A002	PC4A-33A002	PC5A-33A002
Material	Nylon	Aluminum	Aluminum+Zinc	Aluminum

▣ Dimensions

<PC2>

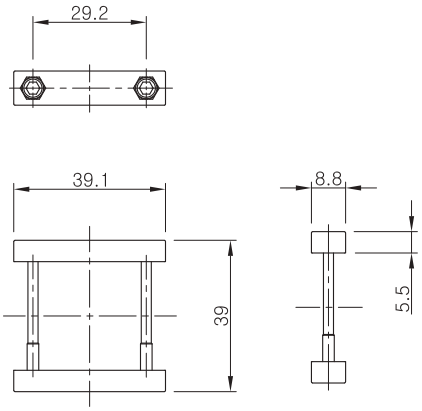

<PC3>

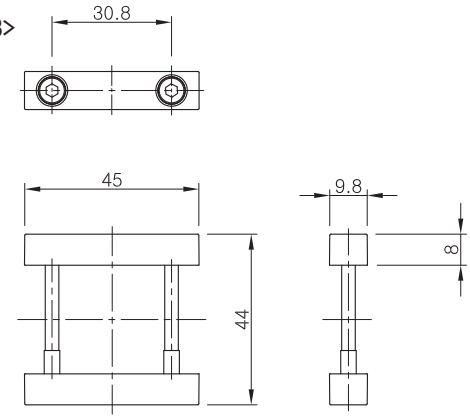

▣ Dimensions

<PC4>

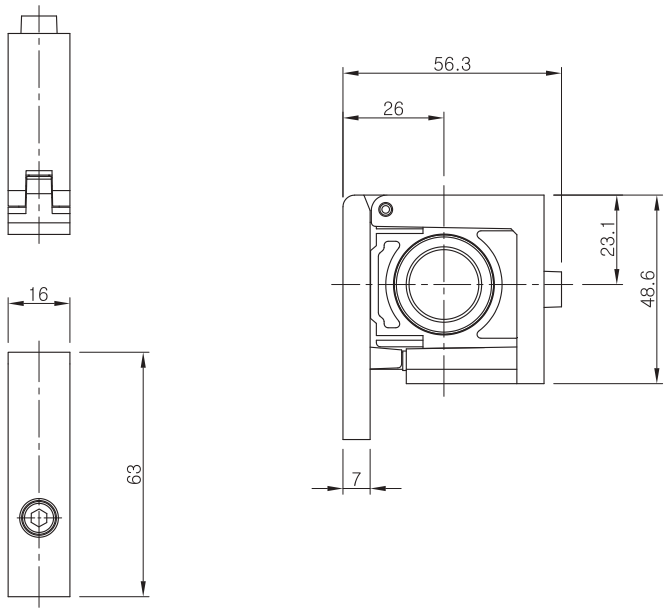

<PC5>

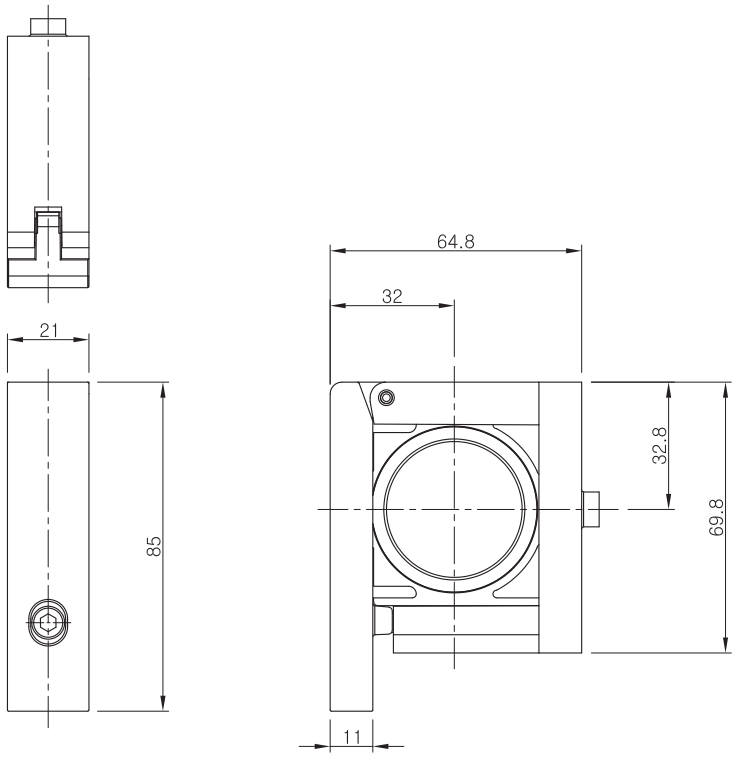

www.TPCpage.com
www.TPCpage.co.kr

Accessories

T-Bracket assembly

▣ Standard Specifications

Specifications	PC2	PC3	PC4	PC5
Item Number	PC2A-33A001	PC3A-33A001	PC4A-33A001	PC5A-33A001
Material	Nylon	Aluminum	Aluminum+Zinc	Aluminum

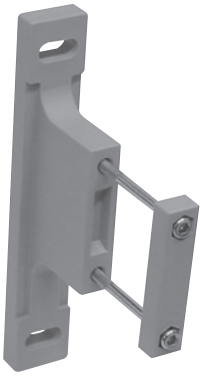

▫ PC2

▫ PC3

▫ PC4

▫ PC5

▣ Dimensions

<PC2>

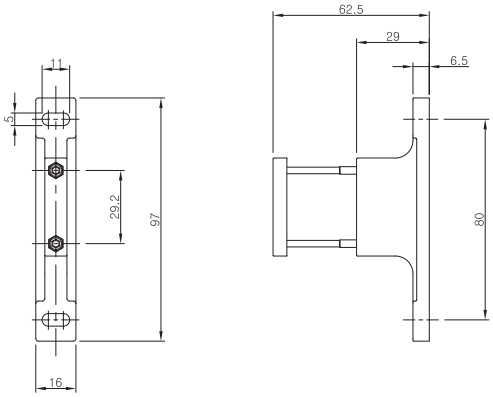

<PC3>

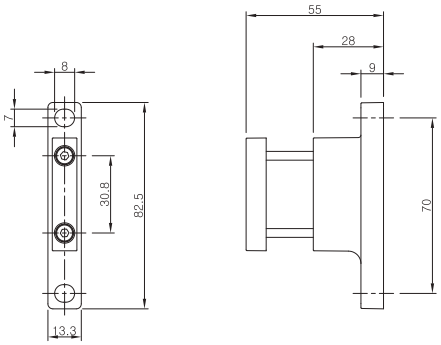

▣ Dimensions

<PC4>

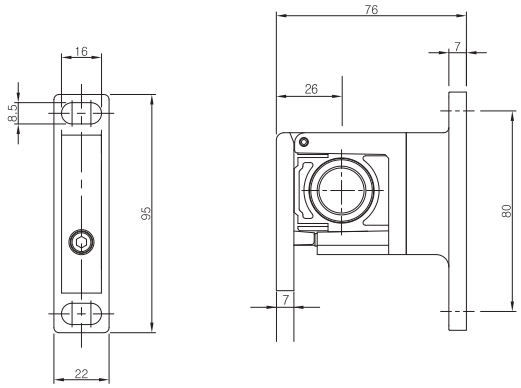

<PC5>

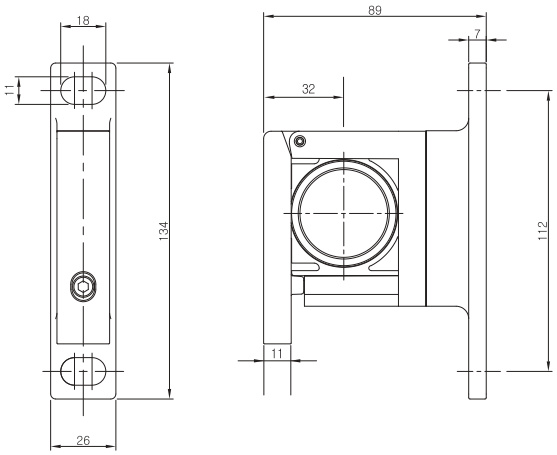

www.TPCpage.com
www.TPCpage.co.kr

Accessories

L-Bracket Unit

▫ PC2

▣ Standard Specifications

Specifications	PC2	PC3	PC4	PC5
Item Number	PR2-33-001-01	PR3-33-001-01	PR4-33-001-01	PR5-33-001-01
Material	Rolled Steel	Rolled Steel	Rolled Steel	Rolled Steel

▫ PC3

▫ PC4

▫ PC5

▣ Dimensions

<PC2>

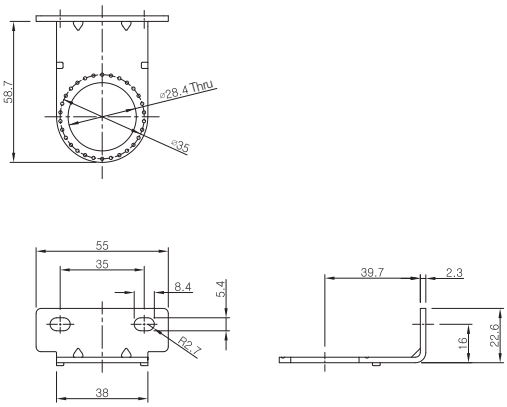

<PC3>

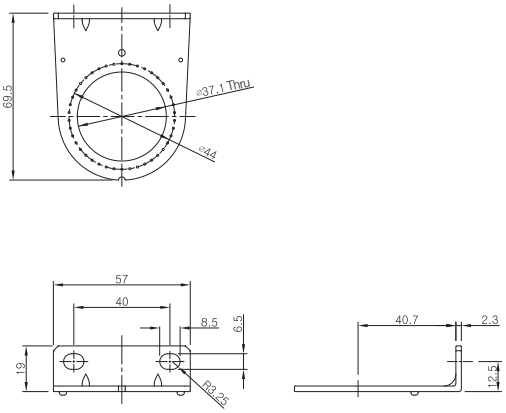

▣ Dimensions

<PC4>

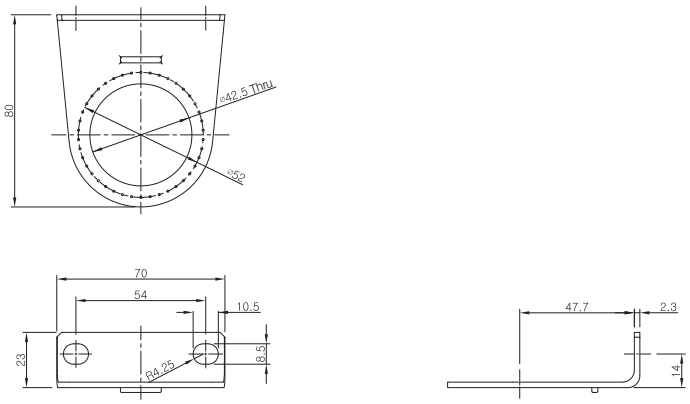

<PC5>

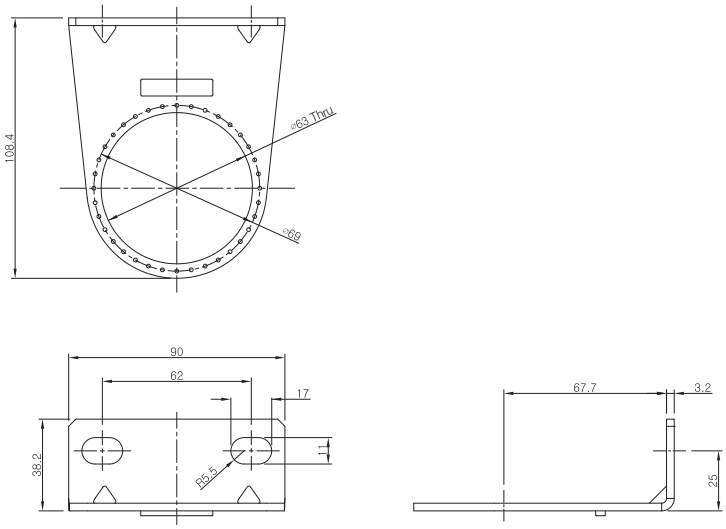

www.TPCpage.com
www.TPCpage.co.kr

Accessories

C-Bracket Unit

▫ PC2

▣ Standard Specifications

Specifications	PC2	PC3	PC4	PC5
Item Number	PF2-33-001-01	PF3-33-001-01	PF4-33-001-01	PF5-33-001-01
Material	Rolled Steel	Rolled Steel	Rolled Steel	Rolled Steel

▫ PC3

▫ PC4

▫ PC5

▣ Dimensions

<PC2>

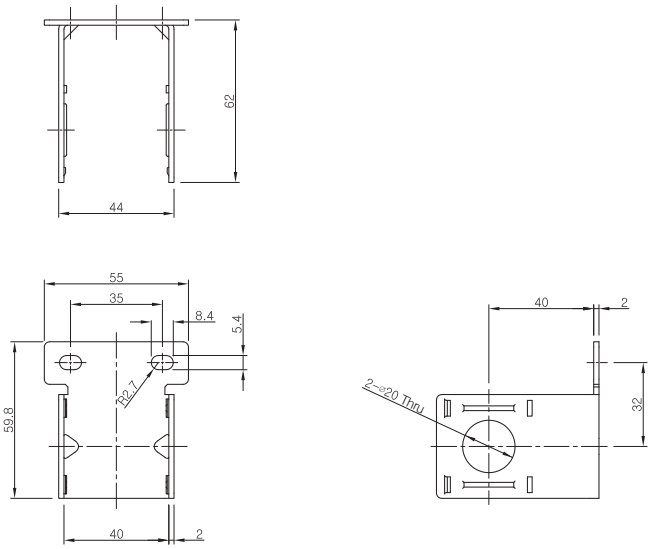

▣ Dimensions

<PC3>

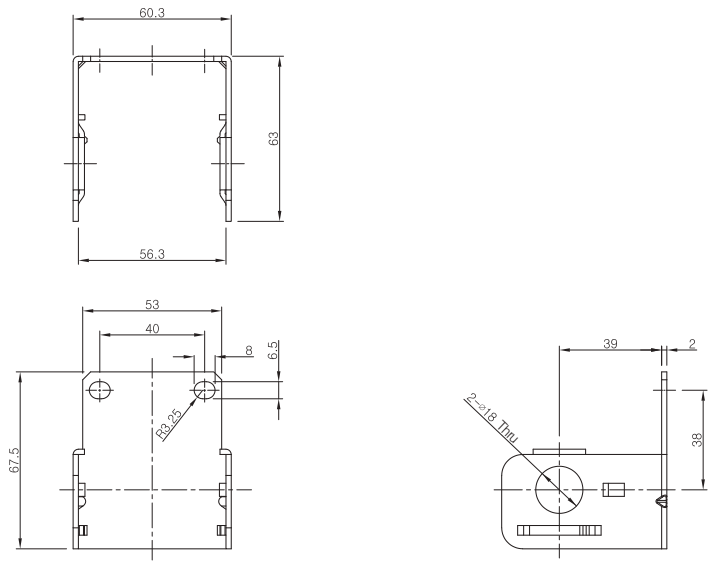

<PC4>

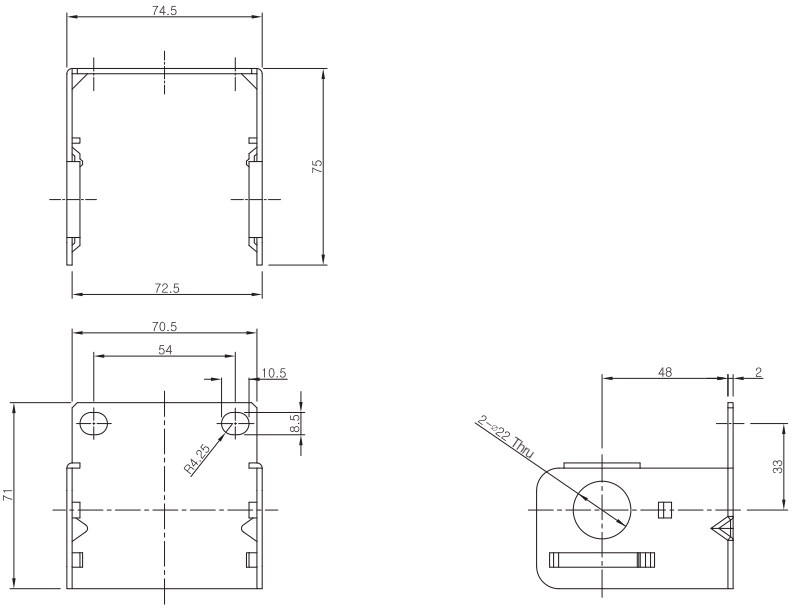

▣ Dimensions
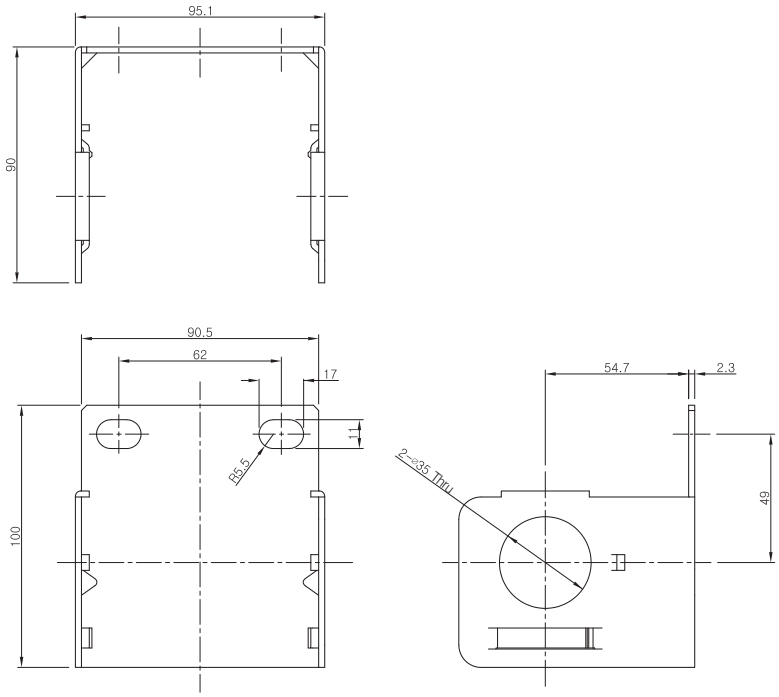
<PC5>